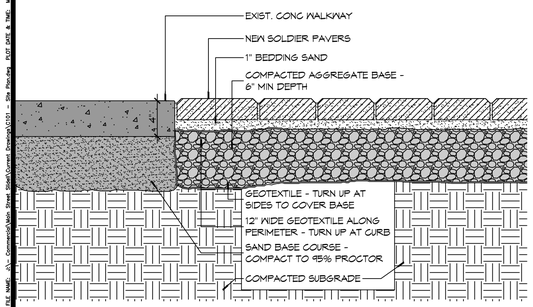


## 2 WALKWAY DETAIL
SCALE: 1 1/2"=1'

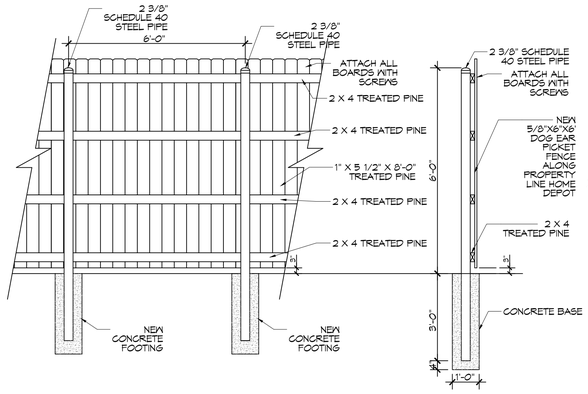


## 3 SIX FOOT FENCE DETAIL
SCALE: 3/8" = 1'-0"

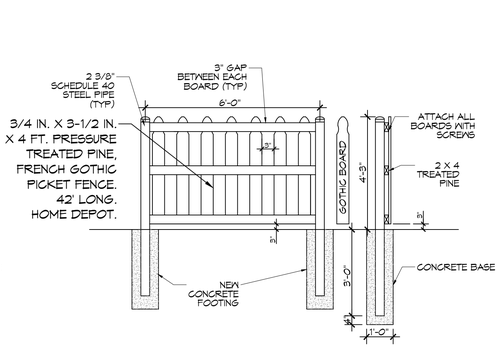


## 4 FOUR FOOT FENCE DETAIL
SCALE: 3/8" = 1'-0"

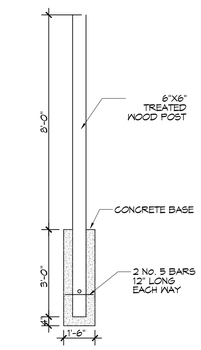


## 5 LIGHT POLE
SCALE: 3/8" = 1'-0"

## GENERAL NOTES

1. SIDEWALK RADII DIMENSIONS ARE TO SIDEWALK CENTERLINE UNLESS NOTED OTHERWISE.
2. CENTER POINT FOR RADII ARE IDENTIFIED AS WORKPOINT (WP).
3. MAXIMUM SIDEWALK INCLINE SHALL NOT EXCEED 5%.
4. WHERE CROSS SLOPE OCCURS, SLOPE SHALL NOT EXCEED 5% AND SLOPE IN THE DIRECTION OF ROBERT STREET.
5. SLOPE PROFILE OF NEW SIDEWALK SHALL CONFORM TO EXIST ADJACENT GRADE ELEVATIONS AT ENDS OF FORMS PROVIDED THAT SLOPE CONFORMS TO NOTE 3.
6. CONTRACTOR SHALL FIELD VERIFY EXISTING LANDMARKS, LOCATIONS, CONDITIONS PRIOR TO CONSTRUCTION AND NOTIFY ARCHITECT WHERE ANY DISCREPANCIES WITH CONSTRUCTION OCCUR.
7. ALL DIMENSIONS ARE ±.

## BRICK COUNT

4"X8" ENGRAVED TILE BRICKS - 2,804 ±

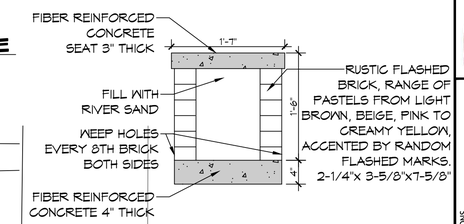


## 6 BRICK BENCH SEAT
SCALE: 1" = 1'-0"

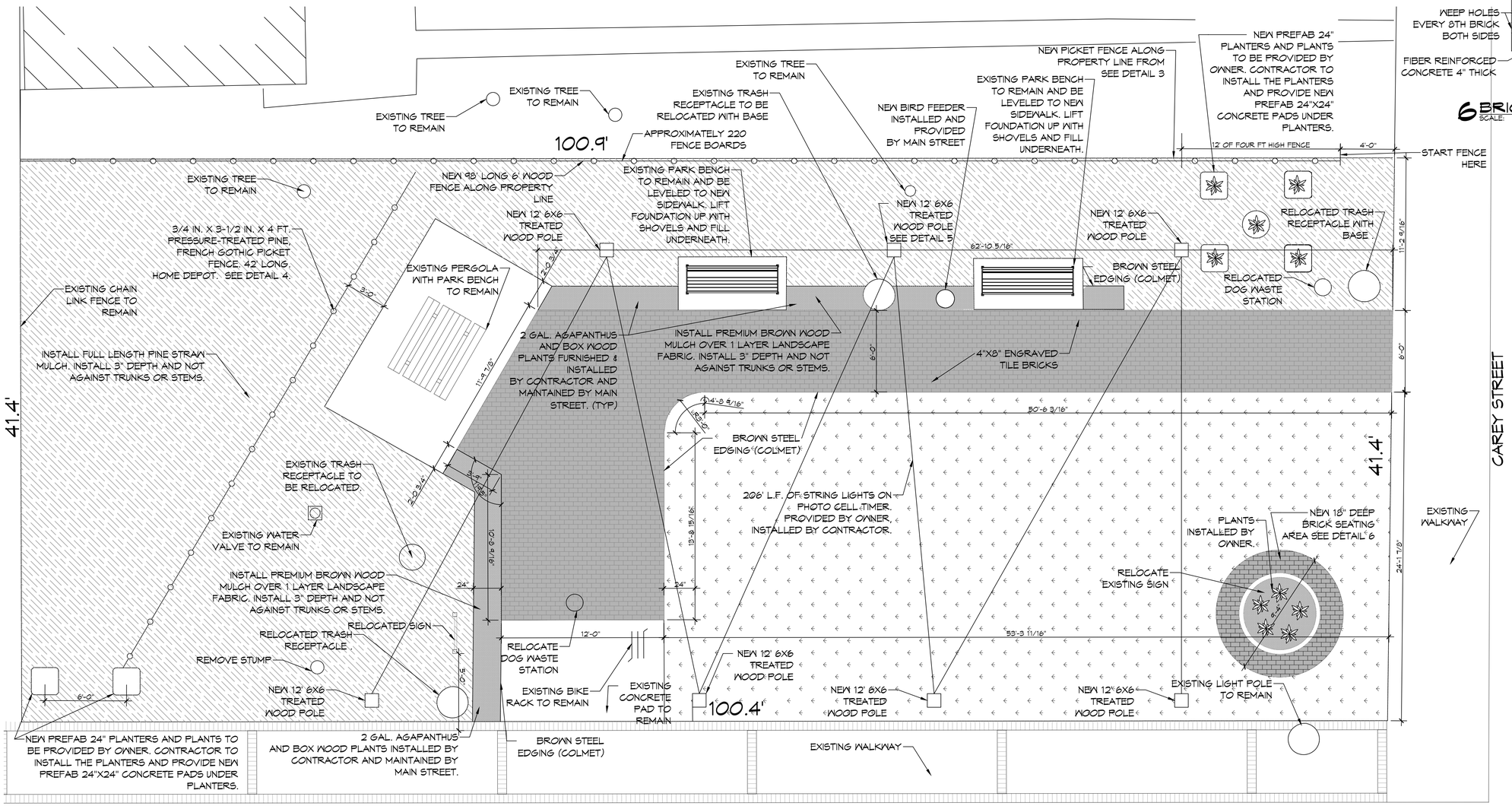


## 1 SITE PLAN
SCALE: 1/4"=1'-0"


DAMMON ENGINEERING, INC.
LOUISIANA & MISSISSIPPI
www.dammonengineering.com
info@dammonengineering.com
PH: 985.649.9832
Chief Engineer: Brian Mistich, PE
5454 Crossing Trail
Slidell, LA 70458


| # | DESCRIPTION | DATE |
|---|---|---|
| | | |

REVISIONS

SEAL:

PARK IMPROVEMENT
MAIN STREET
SLIDELL
2302 CAREY ST.
SLIDELL, LA. 70458

DRAWN BY: CKD | JOB No: 2024 | CHECKED BY: CKD | DATE: 08-05-2024


THIS DOCUMENT IS THE PROPERTY OF DAMMON ENGINEERING, INC. ALL RIGHTS RESERVED. THIS DOCUMENT MAY NOT BE REPRODUCED OR TRANSMITTED IN WHOLE OR IN PART, IN ANY FORM OR BY ANY MEANS, ELECTRONIC OR MECHANICAL, WITHOUT THE PERMISSION OF DAMMON ENGINEERING, INC. ANY REUSE OF THE DOCUMENTS FOR OTHER PROJECTS, FOR WHICH THE DATA WAS CREATED AND MANUFACTURED WITHOUT WRITTEN CONSENT OF DAMMON ENGINEERING, INC. IS PROHIBITED AND WILL BE PROSECUTED TO THE FULLEST EXTENT OF THE LAW.


SHEET TITLE:
PARK IMPROVEMENTS

DRAWING NUMBER:
C100

SHEET No: 1 of 1

FILE NAME: J:\C_Commercial\Main Street Slidell\Current Drawings\C101 - Site Plan.dwg PLOT DATE & TIME: Monday, August 5, 2024 10:54:52 AM