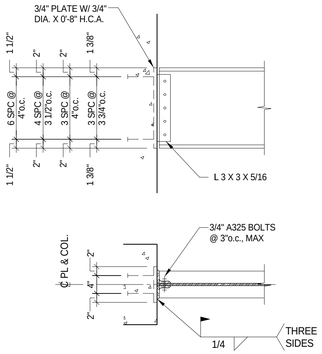

9 DETAIL
3/4" = 1'-0"

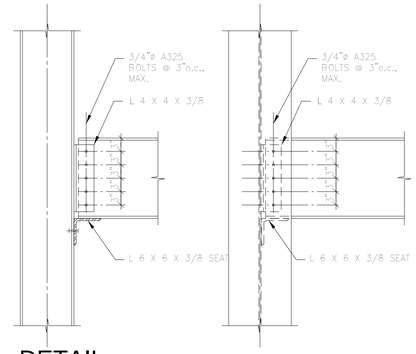

5 DETAIL
3/4" = 1'-0"

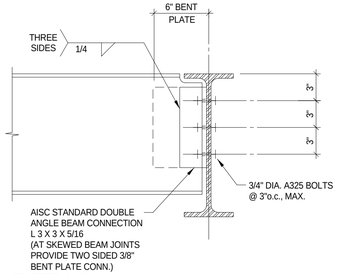

10 DETAIL
3/4" = 1'-0"

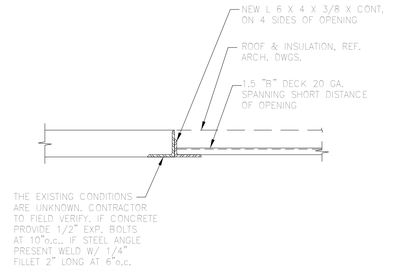

6 SECTION
3/4" = 1'-0"

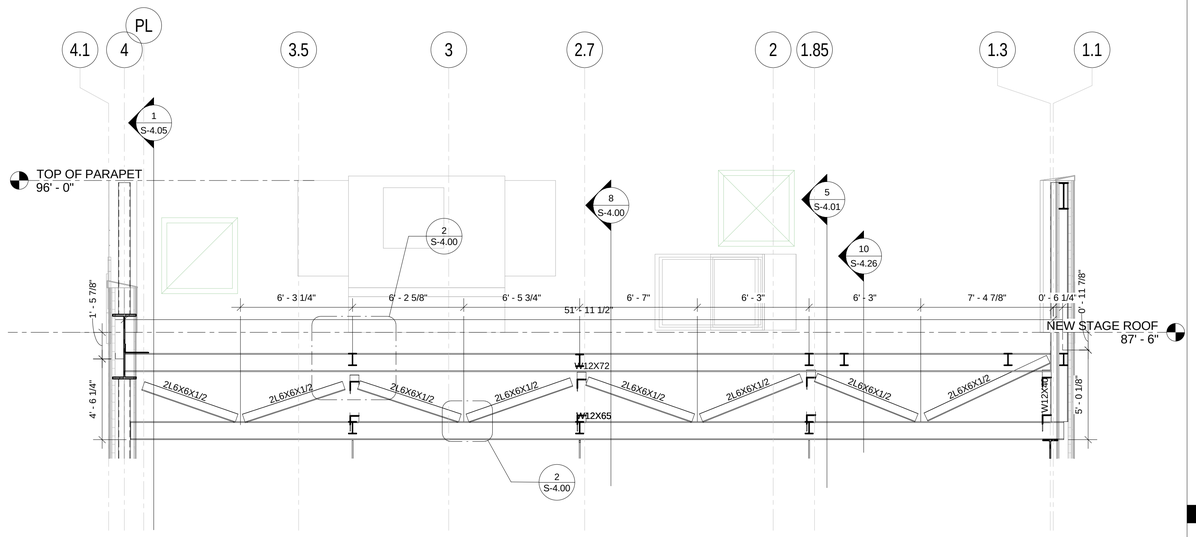

1 SECTION
1/4" = 1'-0"

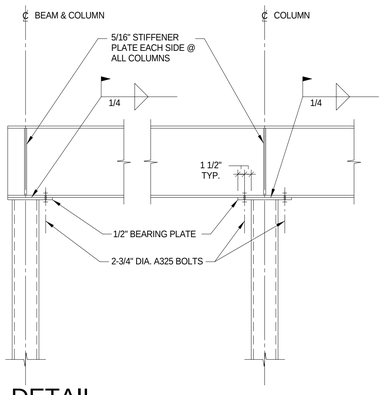

11 DETAIL
3/4" = 1'-0"

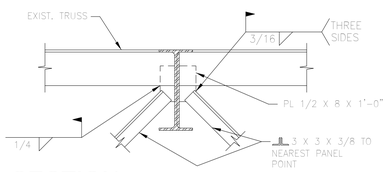

7 SECTION
3/4" = 1'-0"

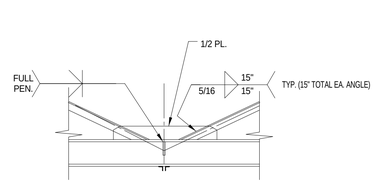

2 DETAIL
3/16" = 1'-0"

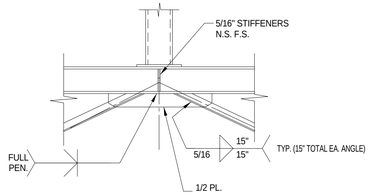

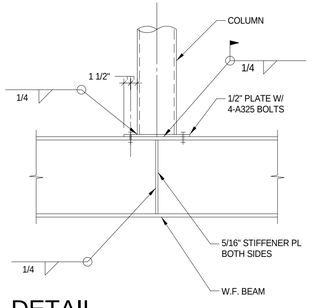

12 DETAIL
3/4" = 1'-0"

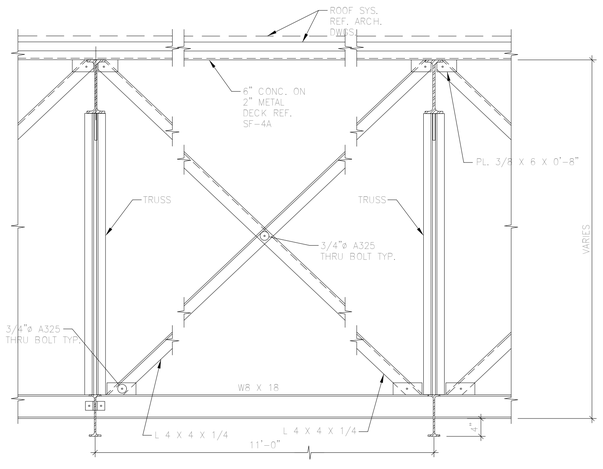

8 SECTION
3/4" = 1'-0"

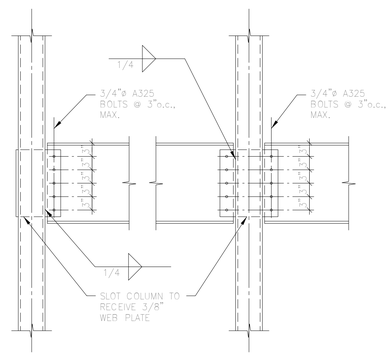

4 DETAIL
3/4" = 1'-0"

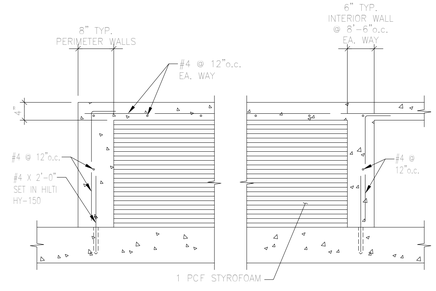

3 DETAIL
3/4" = 1'-0"

THESE DRAWINGS WERE PREVIOUSLY SIGNED AND SEALED ON

FEBRUARY 19, 2010

BY
SHAWN J. FRANKE P.E.
LOUISIANA REG. NO. 28077

THE SAENGER THEATRE RENEWAL PROJECT

142 North Rampart Street
New Orleans, LA

Client
Saenger Theatre Redevelopement Company
200 West loop South, Suite 1040
Houston, TX 77027

Architect
MARTINEZ+JOHNSON
ARCHITECTURE
1412 Eye St., NW
Washington, DC 20005
202.333.4480

Structural Engineer
Shawn J. Franke, P.E.
549 Heimer Road
San Antonio TX 78232
210.979.7900

Theatre Consultant
Schuler Shook
123 Third Street North #210
Minneapolis, MN 55401
612.339.5958

Acoustical Engineer
Akustiks
93 North Main Street South
Norwalk, CT 06584
202.299.1904

MEP Engineer
JBA Consulting Engineers, Inc.
3525 N. Causeway BLVD. Suite 500
Metairie, LA 70002
202.393.1199

Civil Engineer
Linfield, Hunter, & Junius, Inc.
3608 18TH Street Suite 200
Metairie, LA 70002
504.833.5300

Architectural Historian
EHT Traceries, Inc.
1121 Fifth Street NW
Washington, DC 20001
202.393.1199

THESE DRAWINGS, SPECIFICATIONS, AND OTHER DOCUMENTS, (COLLECTIVELY, THE "DOCUMENTS") INCLUDING WITHOUT LIMITATION ELECTRONIC VERSIONS THEREOF AND THE IDEAS, DESIGNS, AND ARRANGEMENTS REPRESENTED THEREBY, ARE AND SHALL REMAIN THE PROPERTY OF MARTINEZ & JOHNSON ARCHITECTURE PC, AS DEFINED BY APPLICABLE CONTRACTUAL AGREEMENTS ("THE AGREEMENTS") AND AS PROTECTED BY THE COPYRIGHT STATUTES OF THE UNITED STATES. USE OF THE DOCUMENTS SHALL BE STRICTLY LIMITED TO THE PROJECT FOR WHICH THEY WERE PREPARED AND DEVELOPED ("THE PROJECT") PER THE TERMS OF THE AGREEMENTS. NO PART OF THE DOCUMENTS SHALL BE COPIED, DISCLOSED TO OTHERS, OR USED IN CONNECTION WITH ANY OTHER WORK OR PROJECT, OR BY ANY OTHER PERSONS FOR ANY PURPOSES, OTHER THAN THE COMPLETION OF THE PROJECT, WITHOUT THE SPECIFIC WRITTEN AUTHORIZATION OF MARTINEZ & JOHNSON ARCHITECTURE PC. THE DOWNLOADING, OPENING, OR VIEWING OF ELECTRONIC VERSIONS OF THE DOCUMENTS OR ANY EQUAL CONTACT WITH ANY PRINTED FORM THEREOF SHALL CONSTITUTE CONCLUSIVE EVIDENCE OF ACCEPTANCE OF THESE RESTRICTIONS.

7502

DATE:	No.:	REVISION:
09.15.10	1	ELECTRICAL VAULT FOR CONSTRUCTION

DATE:	ISSUE:
02.19.10	PERMIT SET
04.02.10	GMP
11.11.10	CONTRACT SET

SHEET TITLE:
SECTIONS & DETAILS

S-4.00

© 2009 M+J