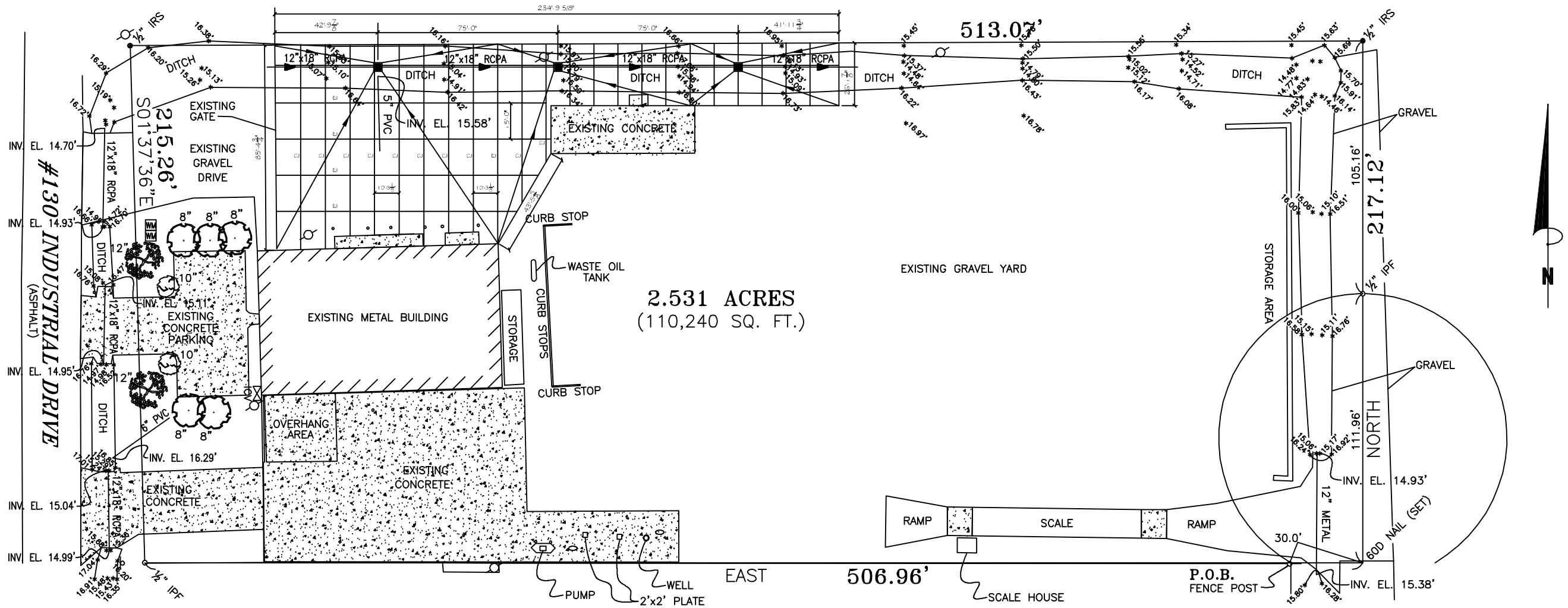

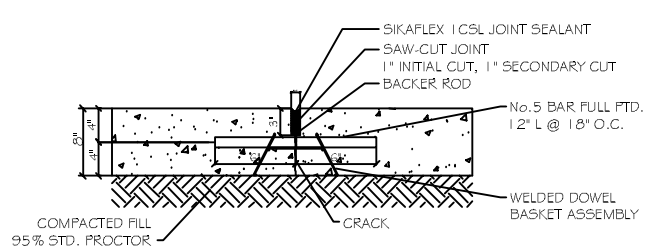

CONTROL JOINT DETAIL

N.T.S.

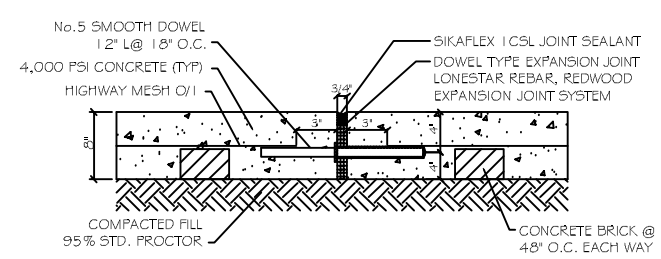

EXPANSION JOINT DETAIL

N.T.S.

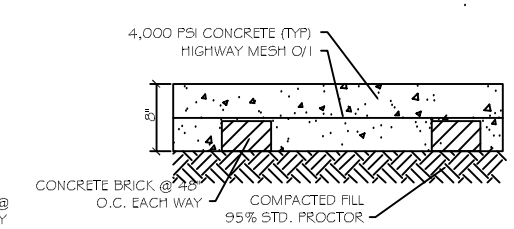

TYPICAL CURB DETAIL

N.T.S.

DRAINAGE PLAN NOTES:

1. ELEVATIONS SHOWN ARE M.S.L.
3. FIELD VERIFY ALL ELEVATIONS AND DRAINAGE SYSTEM PLACEMENT PRIOR TO START OF WORK.

PAVING NOTES:

1) ALL NEW CONCRETE SHALL SHALL HAVE A MINIMUM COMPRESSIVE STRENGTH OF 4,000 PSI AT 28 DAYS AND A MINIMUM THICKNESS OF 5". CONCRETE MIX SHALL BE IN ACCORDANCE WITH THE LATEST REVISION OF ASTM C-150 TYPE 1.
2) CONCRETE PAVING THICKNESS SHALL VARY AS FOLLOWS:
   A) DRIVELANES = 8" THICKNESS
3) ALL REINFORCING STEEL SHALL MEET ASTM-A615 (GRADE 60).
4) ALL REINFORCING STEEL SHALL BE SECURELY SUPPORTED TO PREVENT BOTH VERTICAL AND HORIZONTAL MOVEMENT DURING CONCRETE PLACEMENT. ALL CONTROL AND EXPANSION JOINTS SHALL BE LOCATED AND INSTALLED AS SHOWN ON THE PAVING PLAN AND IN ACCORDANCE WITH THE MANUFACTURER'S RECOMMENDATIONS.
5) ALL SUB GRADE FILL SHALL BE SELECT GRANULAR MATERIAL COMPACTED TO 95% STANDARD PROCTOR DENSITY IN A MAXIMUM OF 6" LIFTS.
6) CONTRACTOR SHALL CONTACT THEIR REGULATORY DEPARTMENT OF ENGINEERING PRIOR TO CONDUCTING ANY WORK.
7) ANY WORK WITHIN THE ROADWAY OR ADJACENT TO THE ROADWAY CAUSING AN INTERFERENCE TO VEHICULAR TRAFFIC MUST CONFORM TO THE REQUIREMENTS SET FORTH BY THE UNIFORM MANUAL OF TRAFFIC CONTROL DEVICES OF THE STATE OF LOUISIANA. THE CONTRACTOR MUST FURNISH ALL NECESSARY TRAFFIC SIGNS AND/OR BARRICADES AND MAINTAIN THEM DURING CONSTRUCTION ACTIVITY.

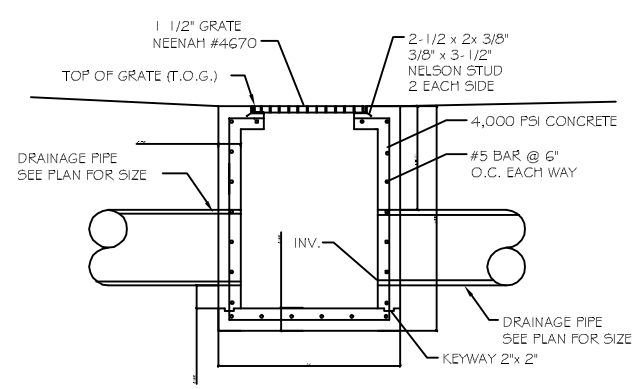

TYPICAL DROP INLET

N.T.S.

LEGEND

- PROPERTY LINE
- SETBACK LINE
- BUFFER ZONE LINE
- UTIL. EASEMENT LINE
- CJ - CONTROL JT.
- EJ - EXPANSION JT.
- SHEET FLOW ARROW
- 0.00 - INVERT ELEVATION
- # 0.00 - TOP OF GRATE ELEVATION
- 00.00 - NEW ELEVATION

DAMMON ENGINEERING, INC.
Architects & Engineers
dammoneng@bellsouth.net
PHONE: 985-649-9032
FAX: 985-641-9350
CHIEF ENGINEER: EMMETT DAMMON, P.E.
CHIEF ARCHITECT: ROBERT WILTSE
554 OLD SPANISH TRAIL
SLIDELL, LA 70458

These plans are the property of Dammon Engineering, Inc. and are not to be used for any other project or purpose without the written permission of Dammon Engineering, Inc. Failure to comply with the above will be at the user's own risk and Dammon Engineering, Inc. will be held harmless. Dammon Engineering, Inc. assumes no responsibility for any changes made to these plans without its written consent.

B. & W. TRUCKING INC.

130 INDUSTRIAL PARK
SLIDELL, LA
70458

JOB No:	2146	DATE:	08-01-2012
DRAWN BY:	BSN	CHECKED BY:	BSN

REVISIONS

#	DESCRIPTION	DATE

FLOOR PLAN

SHEET No: 1 OF 1

C-1