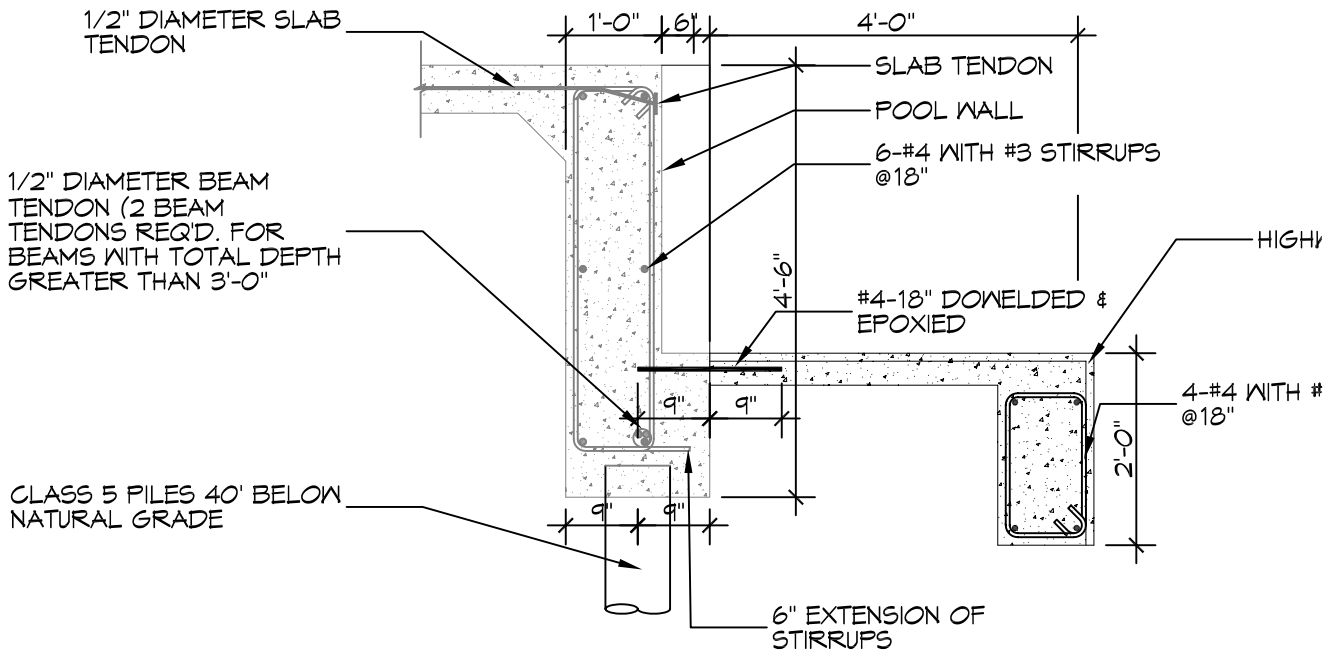

C
S101 S102

SECTION

SCALE: 1/2" = 1'-0"

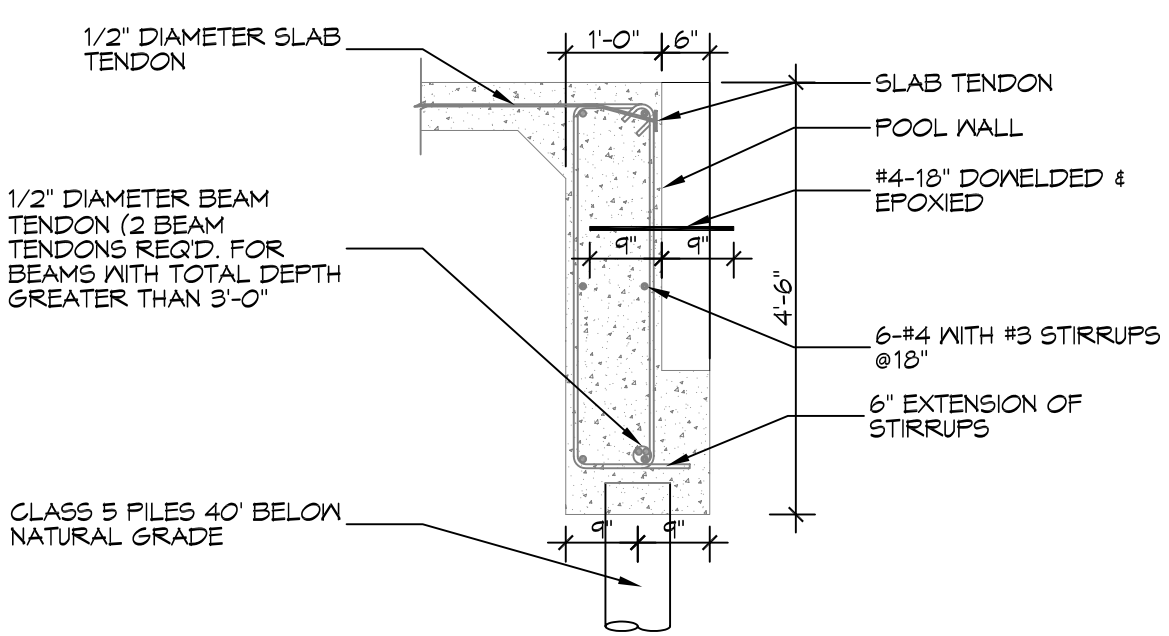

B
S101 S102

SECTION

SCALE: 1/2" = 1'-0"

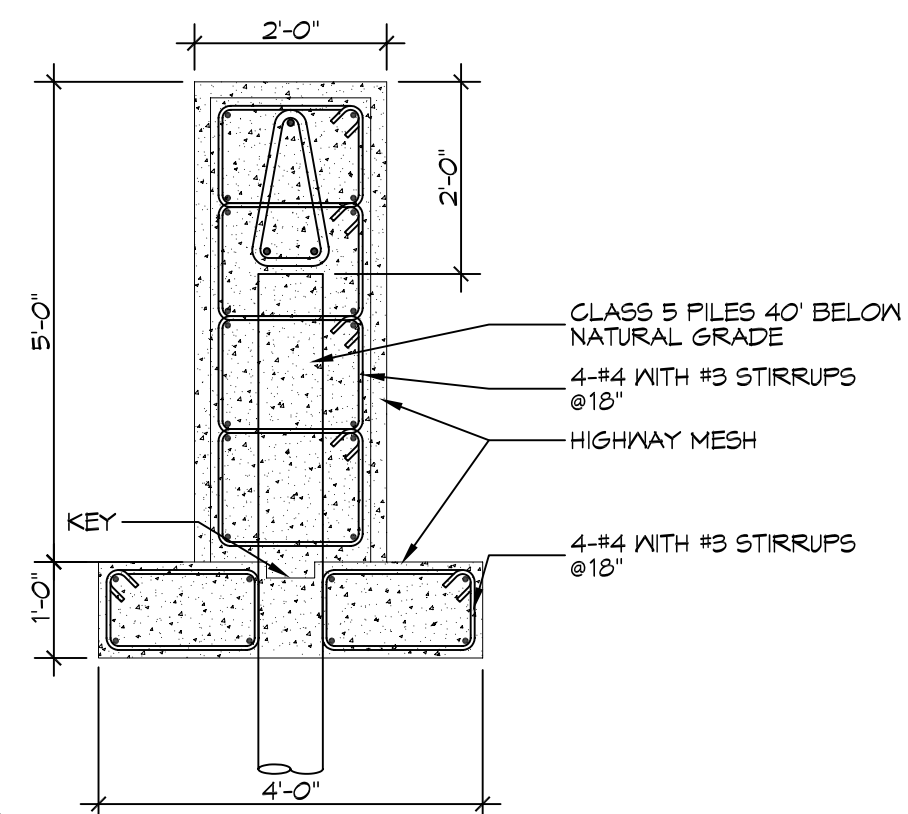

A
S101 S102

SECTION

SCALE: 1/2" = 1'-0"

DAMMON ENGINEERING, INC.
554 Old Spanish Trail Slidell, LA 70458 (985) 649-5832
dammonengineering.com
info@dammonengineering.com
PHONE: 985-649-5832

CHIEF ENGINEER: BRIAN A. MISTICH, P.E.
554 OLD SPANISH TRAIL
SLIDELL, LA 70458

NEW ADDITION FOUNDATOIN

GARY MARTINEZ

LOT 144, CLIPPER ESTATES
SLIDELL, LA

JOB #: 2019	DATE: 06/12/2019
DRAWN BY: CKD/JAW	CHECKED BY: BAM

S102