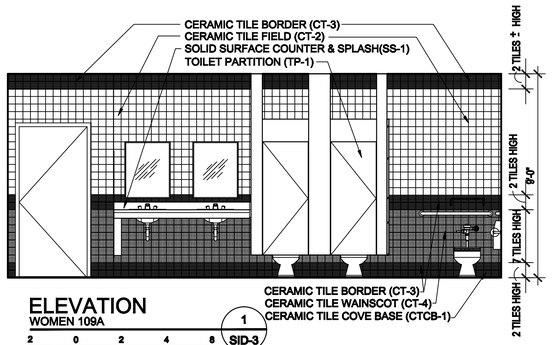

ELEVATION
WOMEN 109A
1 SID-3
2 0 2 4 8
SCALE 3/8" = 1'-0"

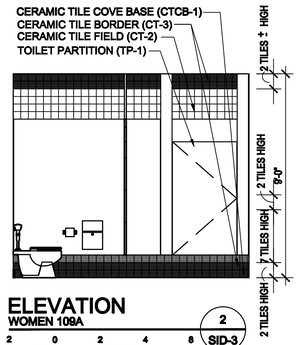

ELEVATION
WOMEN 109A
2 SID-3
2 0 2 4 8
SCALE 3/8" = 1'-0"

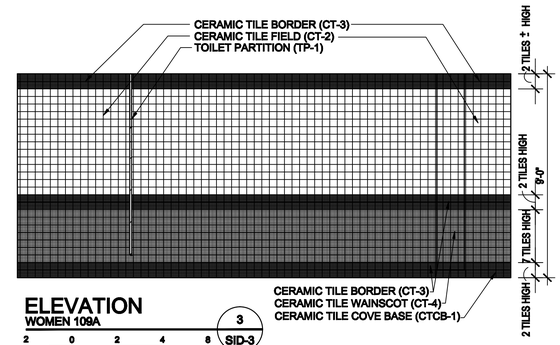

ELEVATION
WOMEN 109A
3 SID-3
2 0 2 4 8
SCALE 3/8" = 1'-0"

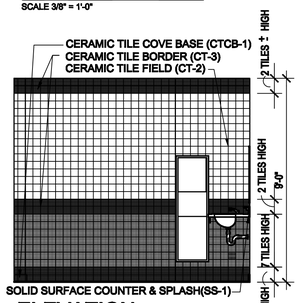

ELEVATION
WOMEN 109A
4 SID-3
2 0 2 4 8
SCALE 3/8" = 1'-0"

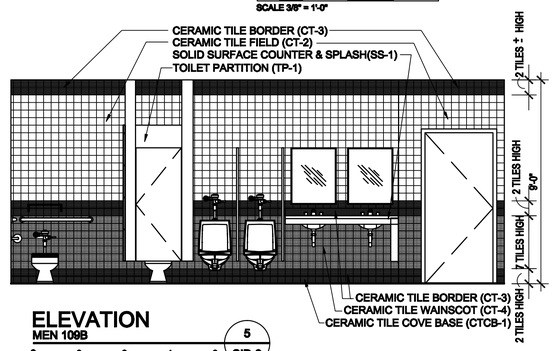

ELEVATION
MEN 109B
5 SID-3
2 0 2 4 8
SCALE 3/8" = 1'-0"

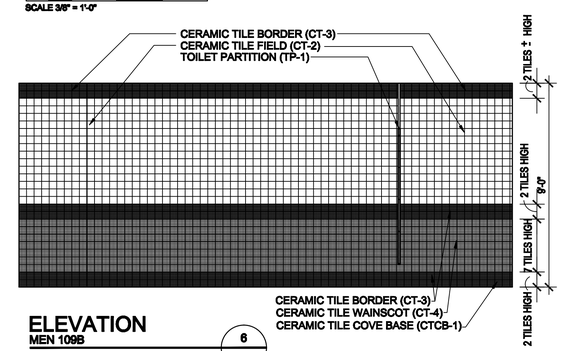

ELEVATION
MEN 109B
6 SID-3
2 0 2 4 8
SCALE 3/8" = 1'-0"

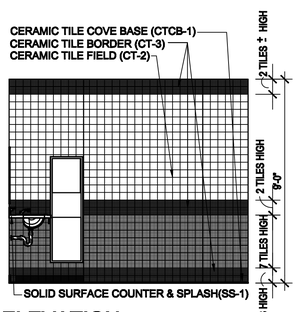

ELEVATION
MEN 109B
7 SID-3
2 0 2 4 8
SCALE 3/8" = 1'-0"

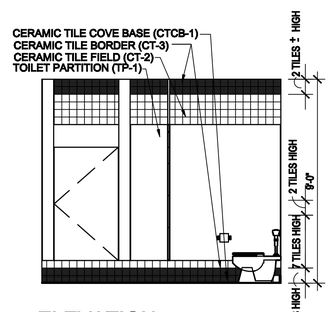

ELEVATION
MEN 109B
8 SID-3
2 0 2 4 8
SCALE 3/8" = 1'-0"

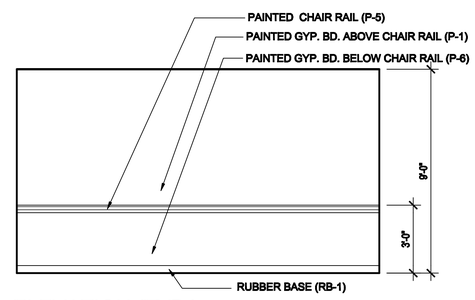

ELEVATION (TYP.)
CONFERENCE ROOM #1 107
9 SID-3
2 0 2 4 8
SCALE 3/8" = 1'-0"

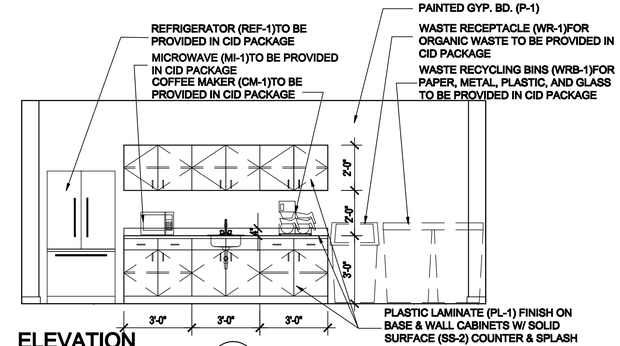

ELEVATION
BREAK ROOM 108
10 SID-3
2 0 2 4 8
SCALE 3/8" = 1'-0"

FINAL DESIGN
10-29-09

BROADMOOR DESIGN
BROADMOOR, L.L.C.
2740 NORTH ARNOULT ROAD, METAIRIE, LA 70002 (504) 885-5401
www.broadmoordfic.com

DRAWING REVISIONS

REV.	DESCRIPTION	PREP. BY	DATE	APPROVD.

NAS JRB New Orleans — Belle Chasse, Louisiana

NAVAIRSEFAC CALIBRATION BLDG.

INTERIOR ELEVATIONS

APPROVED

DATE: — ETD FOR COMMANDER, NAVFAC

NAVFAC
Naval Facilities Engineering Command
Southern Division, Charleston, SC

RECORD DRAWING DATE 10-29-09
CODE I.D. NO. —
DRAWING SIZE: D
SPEC. NO.06– —
CONSTRN. CONTR. NO. – N62467-05-D-0096
NAVFAC DRAWING NO. 15030925
SHEET 3 OF 4
SID-3