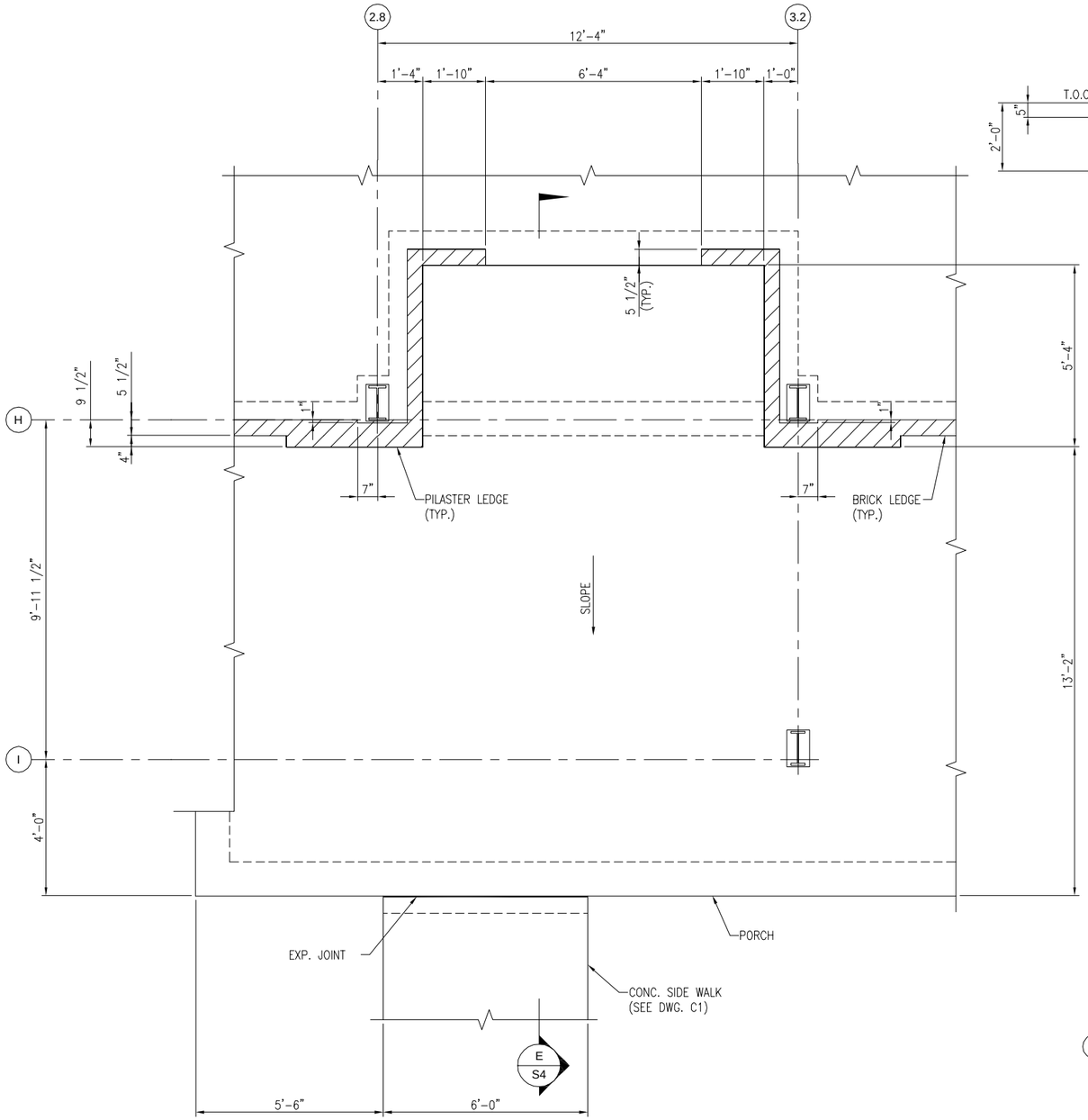

DETAIL 3/S1
1/2" = 1'-0"

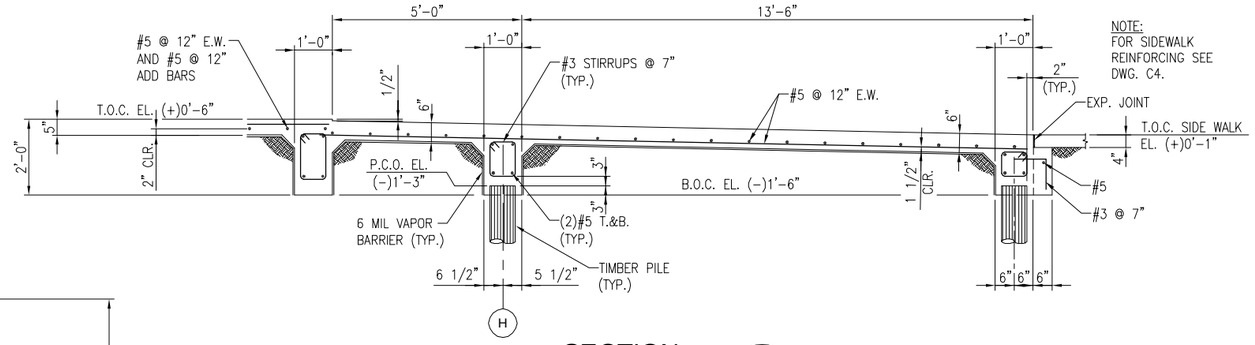

SECTION E/S4
1/2" = 1'-0"

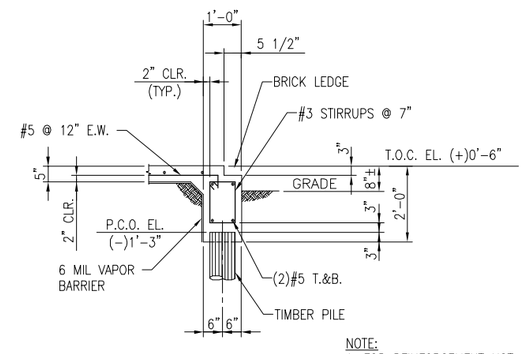

NOTE:
1. FOR REINFORCEMENT NOT SHOWN SEE DWG. S2.1.

SECTION F/S1,S2
1/2" = 1'-0"

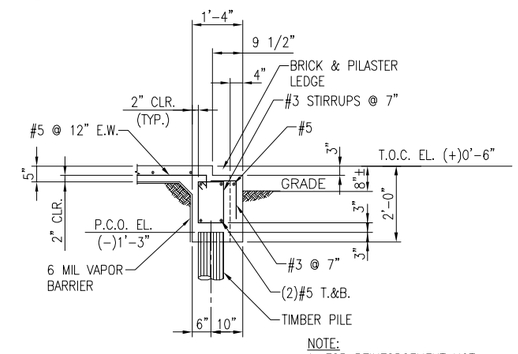

NOTE:
1. FOR REINFORCEMENT NOT SHOWN SEE DWG. S2.1.

SECTION G/S1,S2
1/2" = 1'-0"

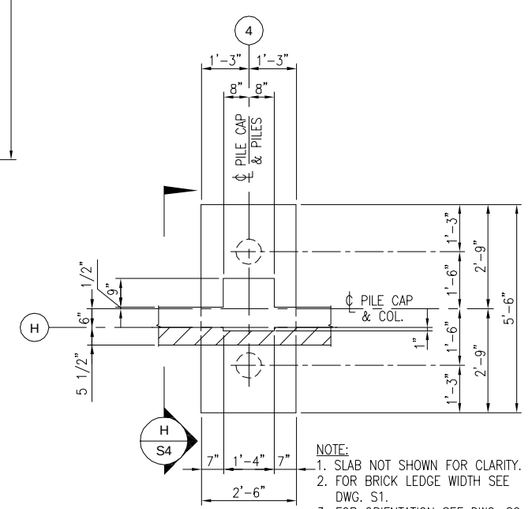

NOTE:
1. SLAB NOT SHOWN FOR CLARITY.
2. FOR BRICK LEDGE WIDTH SEE DWG. S1.
3. FOR ORIENTATION SEE DWG. S2.

(TYP. 9 PLACES)

DETAIL 4/S2
1/2" = 1'-0"

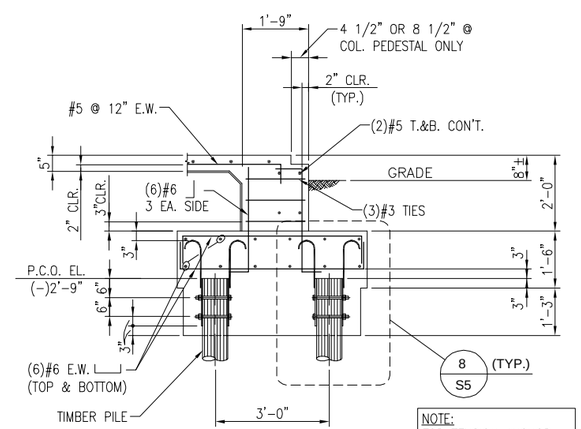

NOTE:
1. FOR REINFORCEMENT NOT SHOWN SEE DWG. S2.1.

NOTE:
FOR TENSION ANCHOR LOCATIONS SEE PILE CAP SCHEDULE ON DWG. S7.

SECTION H/S4,S5,S6,S7
1/2" = 1'-0"

ISSUED BY:
Waldemar S. Nelson & Co.
FINAL DESIGN
29 /OCT /2009

WALDEMAR S. NELSON AND COMPANY
INCORPORATED
ENGINEERS AND ARCHITECTS
1200 ST. CHARLES AVE NEW ORLEANS, LA.

BROADMOOR BUILDING by DESIGN
BROADMOOR, L.L.C.
2740 North Arnoult Road
Metairie, Louisiana 70002
www.broadmoorllc.com

DRAWING REVISIONS

REV.	DESCRIPTION	PREP' BY	DATE	APPROV.
0	FINAL DESIGN – 10/29/09	RW	10/29/09	TN

Belle Chasse, Louisiana
NAS JRB New Orleans

NAVAIRSEFAC CALIBRATION BLDG.
SECTIONS AND DETAILS
SHEET 2 OF 4

DATE: -
APPROVED: EFD FOR COMMANDER, NAVFAC

Naval Facilities Engineering Command
Southern Division, Charleston, SC

STATE OF LOUISIANA
TOMAS J. NALLY
License No. 23450
PROFESSIONAL ENGINEER
IN
CIVIL ENGINEERING

RECORD DRAWING DATE	3/31/09
CODE I.D. NO.	–
DRAWING SIZE:	D
SPEC. NO.	06––
CONSTRN. CONTR. NO.	N62467–
NAVFAC DRAWING NO.	15030879
SHEET	6 OF 12

S4

DWG: R:\2008\20080266 Broadmoor Calibr Lab\4500 CD\20080266–S4.dwg USER: cchotto
DATE: Nov 05, 2009 1:02pm