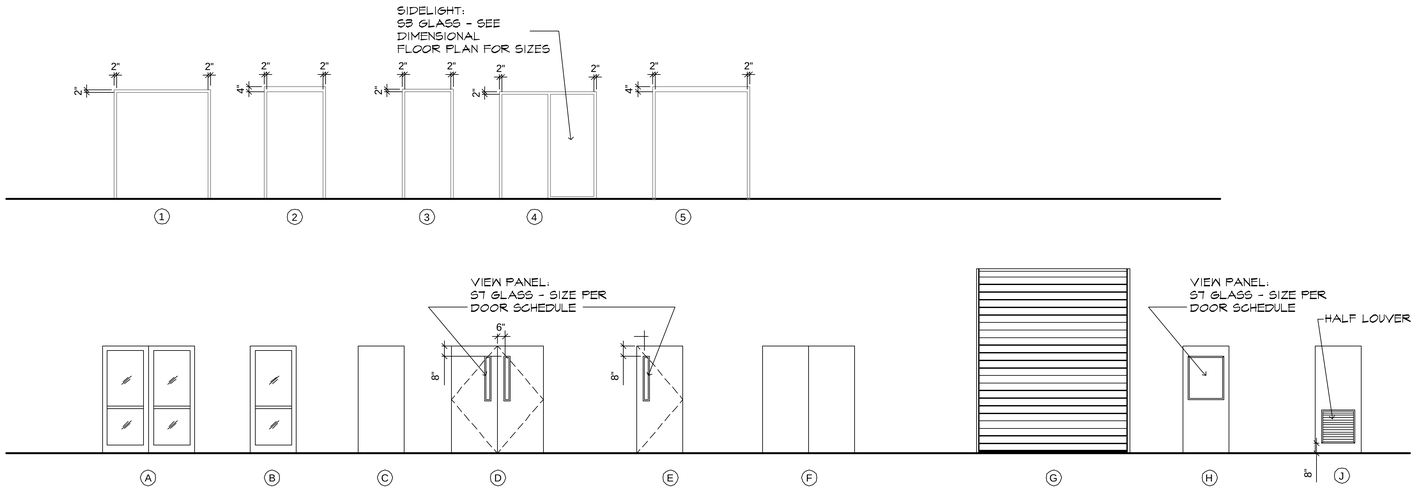

DOOR & FRAME NOTES

1. FOR ALL SIZES, MATERIALS & ACCESORIES REFER TO DOOR & FRAME SCHEDULE ON SHEET #A9.05.

2. MASONRY ROUGH OPENING DIMENSIONS SHOWN ARE NOMINAL DIMENSIONS TYPICAL.

3. CONTRACTOR TO FIELD VERIFY ACTUAL OPENING DIMENSIONS PRIOR TO FABRICATION TYPICAL.

4. CONTRACTOR TO ALLOW 3/8" PERIMETER SEALANT JOINT TYPICAL ALL SIDES AT EXTERIOR OPENINGS.

5. CONTRACTOR TO ALLOW 1/4" PERIMETER SEALANT JOINT TYPICAL ALL SIDES AT INTERIOR OPENINGS.

1 / A3.08 DOOR FRAME TYPES

SCALE: 1/4"=1'-0"

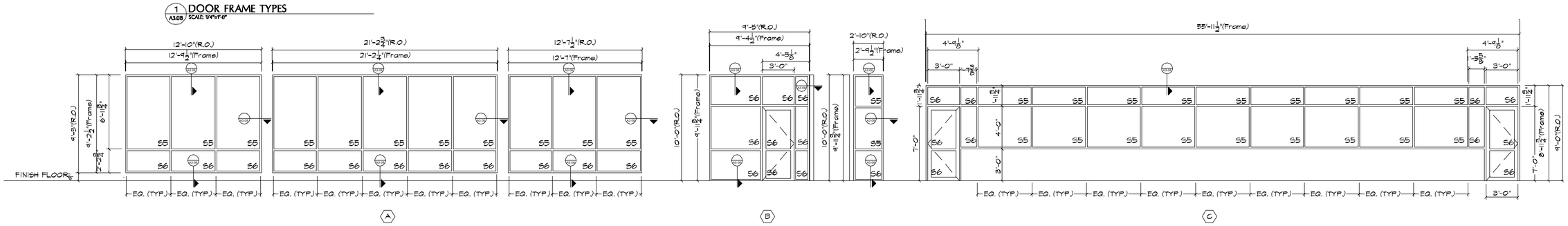

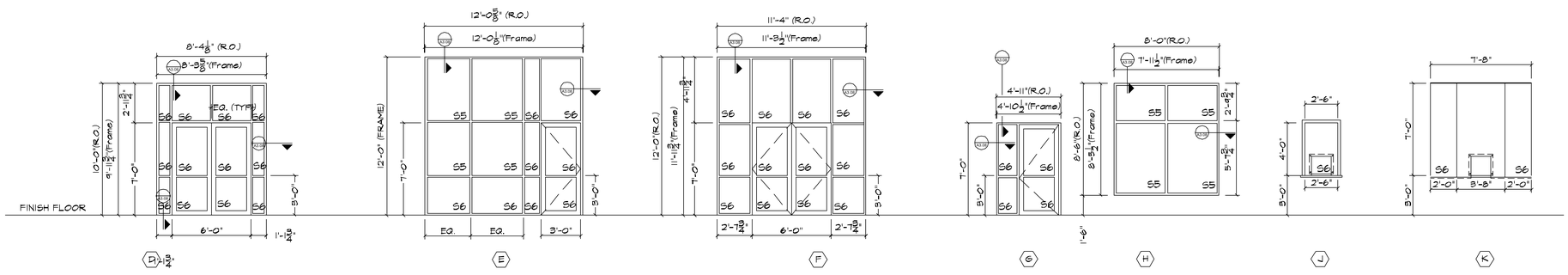

GLAZING TYPES:

EXTERIOR

S1 1 5/16" INSULATED, IMPACT GLAZING SYSTEM REFLECTIVE

S2 1 5/16" INSULATED, IMPACT GLAZING SYSTEM TINTED

S3 1 5/16" SPANDREL PANEL, IMPACT GLAZING SYSTEM -REFLECTIVE

S4 9/16" IMPACT GLAZING SYSTEM - TINTED

S8 9/16" LAMINATED

S9 9/16" LAMINATED, CLEAR

INTERIOR

S5 1/4" ANNEALED - CLEAR

S6 1/4" TEMPERED - CLEAR

S7 1/4" WIRE GLASS - CLEAR

NOTE: AT A MINIMUM TEMPERED GLAZING IS TO BE PROVIDED AT LOCATIONS AS REQUIRED BY CODE. ADDITIONALLY PROVIDE TEMPERED GLAZING AT LOCATIONS WHERE NOTED.

1 / A3.06 INTERIOR- STOREFRONT/WINDOW ELEVATIONS

SCALE: 1/4"=1'-0"

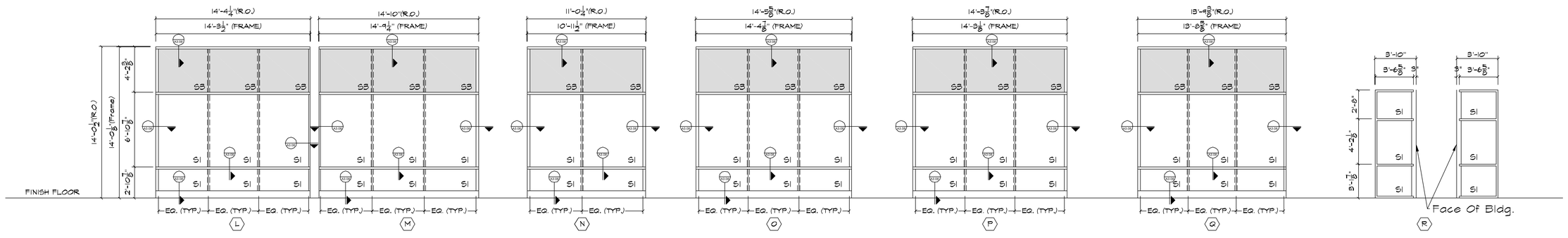

1 / A3.06 EXTERIOR- CURTAIN WALL/STOREFRONT ELEVATIONS

SCALE: 1/4"=1'-0"

RCL
CONSULTANTS, L.L.C.
Planning • Architecture • Engineering • Construction Management

RICHARD C. LAMBERT
CONSULTANTS, L.L.C.

521 N. Causeway Blvd.
Mandeville, LA 70448
985-727-4440
Fax: 985-727-4467

#1 Poydras St., Ste. 1400 #10
New Orleans, LA 70130
504-837-7346

This drawing and design is the exclusive property of Richard C. Lambert Consultants, LLC and may not be reproduced or used without authorization and written permission. © 2007

RCLC
Project Number: 0687

Date Issued: 05/15/07
Drawn By: VFA & JMS
Checked By: RLE

Revisions:

ST. TAMMANY PARISH SHERIFF'S OFFICE

BROWNSWITCH ROAD
SLIDELL, LOUISIANA

CONSTRUCTION DOCUMENTS

DOOR & WINDOW ELEVATIONS

Sheet Number:

A3.06

Copyright 2007