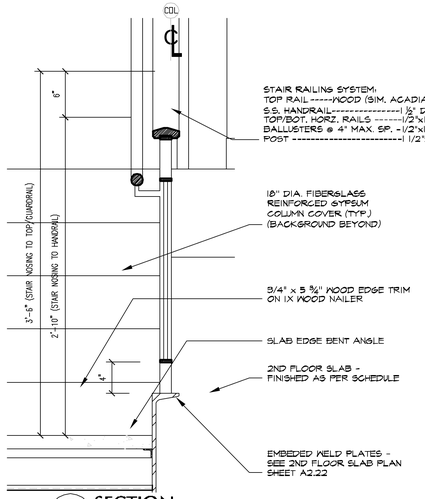

7 A4.51 SECTION
SCALE: 1 1/2"=1'-0"

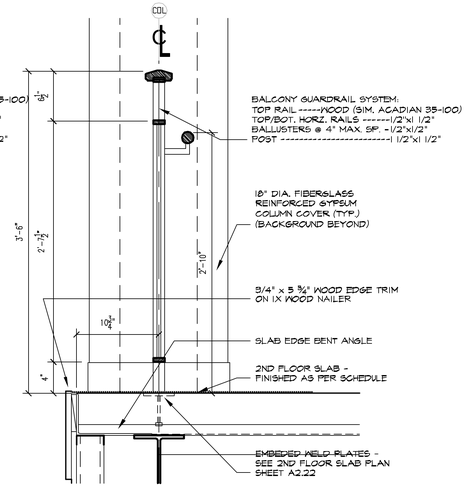

6 A4.51 SECTION
SCALE: 1 1/2"=1'-0"

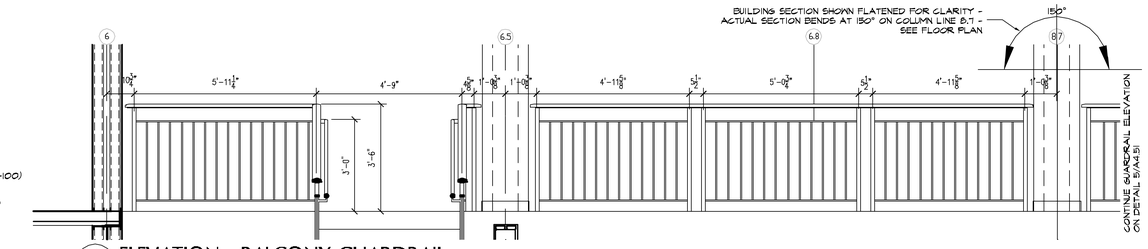

4 A4.51 ELEVATION - BALCONY GUARDRAIL
SCALE: 1/2"=1'-0"

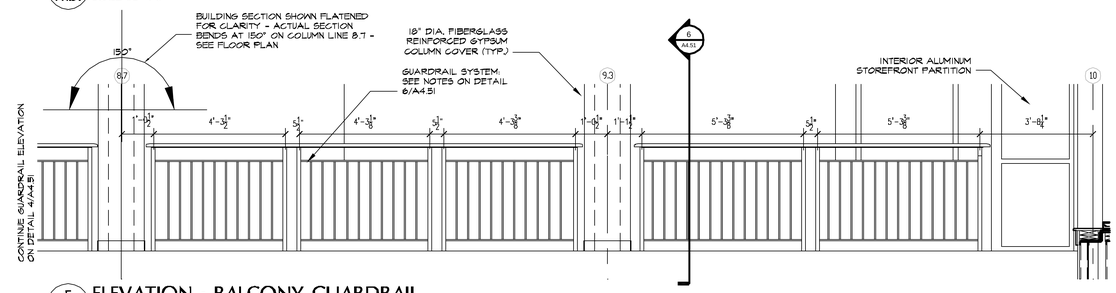

5 A4.51 ELEVATION - BALCONY GUARDRAIL
SCALE: 1/2"=1'-0"

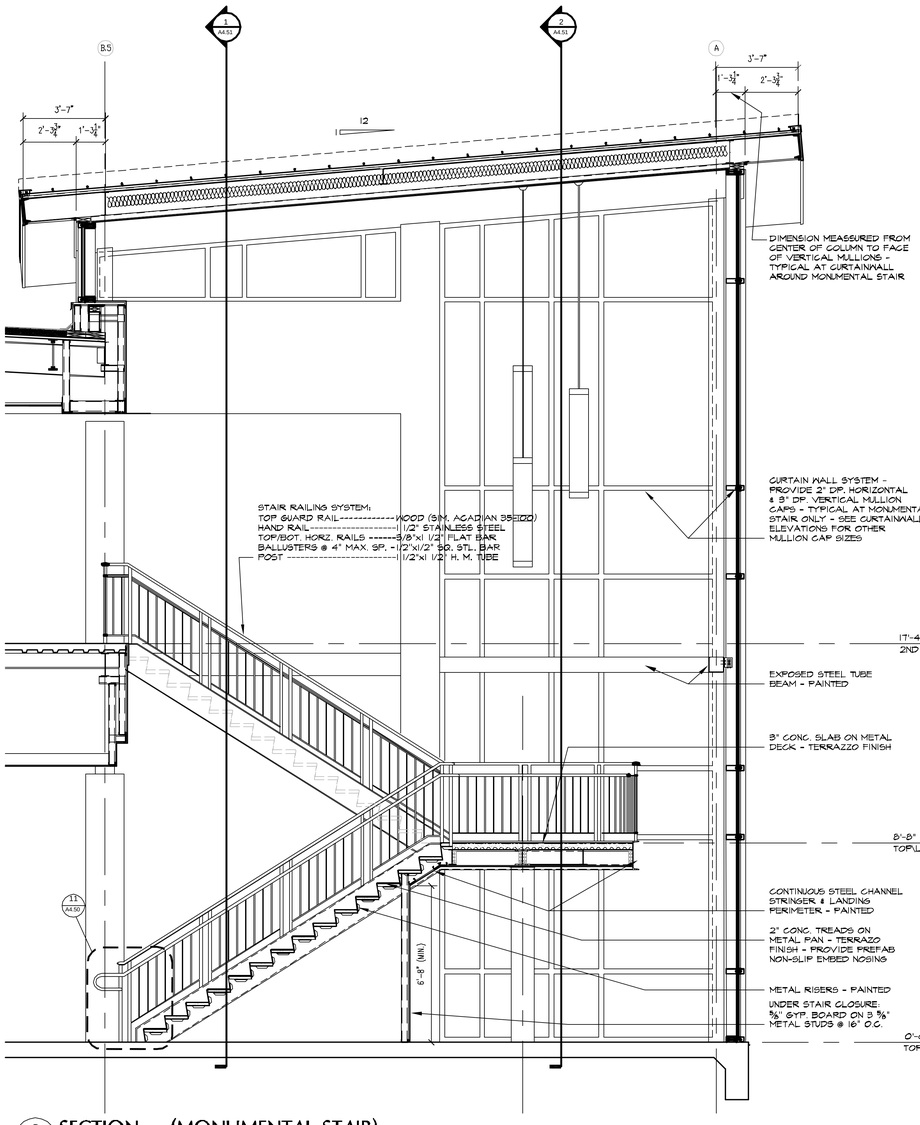

3 A4.51 SECTION (MONUMENTAL STAIR)
SCALE: 3/8"=1'-0"

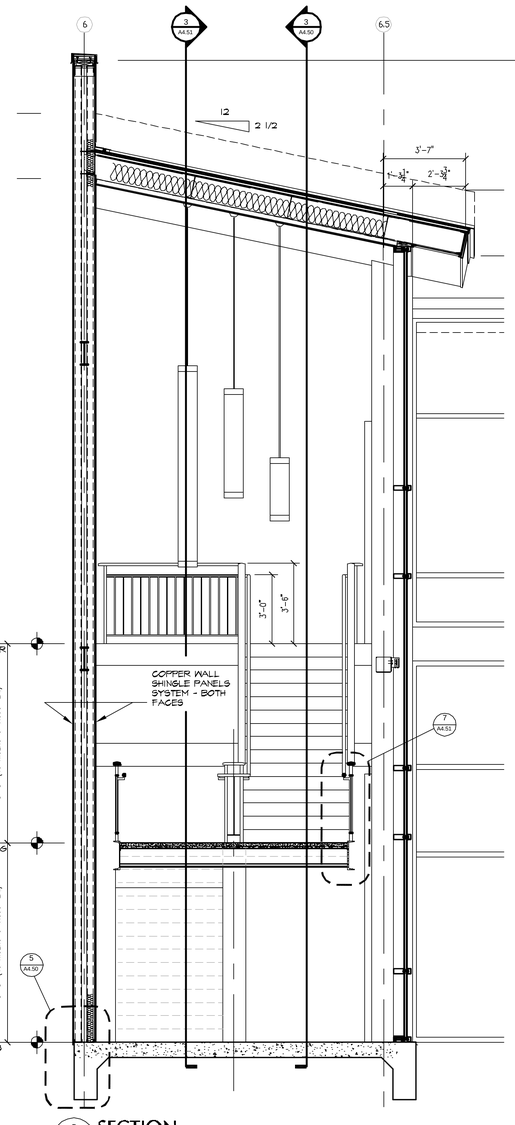

2 A4.51 SECTION
SCALE: 3/8"=1'-0"

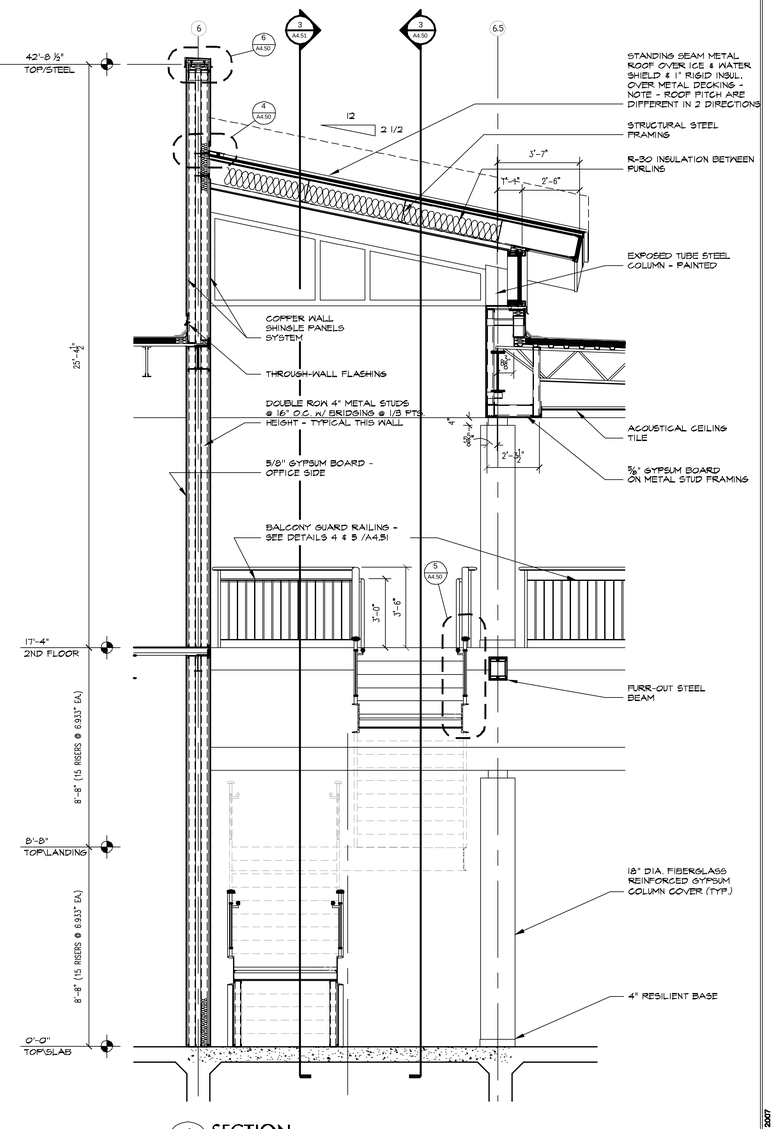

1 A4.51 SECTION
SCALE: 3/8"=1'-0"

RCL CONSULTANTS, L.L.C.
Planning • Architecture • Engineering • Construction Management

RICHARD C. LAMBERT
CONSULTANTS, L.L.C.

521 N. Causeway Blvd.
Mandeville, LA 70448
985-727-4440
Fax: 985-727-4467

#1 Poydras St., Ste. 1400 #10
New Orleans, LA 70130
504-837-7346

This drawing and design is the exclusive property of Richard C. Lambert Consultants, LLC. and may not be reproduced or used without authorization and written permission. © 2007

RCLC
Project Number: 0687

Date Issued: 05/15/07
Drawn By: VFA & JMS
Checked By: RLE

Revisions:

ST. TAMMANY PARISH SHERIFF'S OFFICE

BROWNSWITCH ROAD
SLIDELL, LOUISIANA

CONSTRUCTION DOCUMENTS

STAIR DETAILS

Sheet Number:
A4.51

Copyright 2007