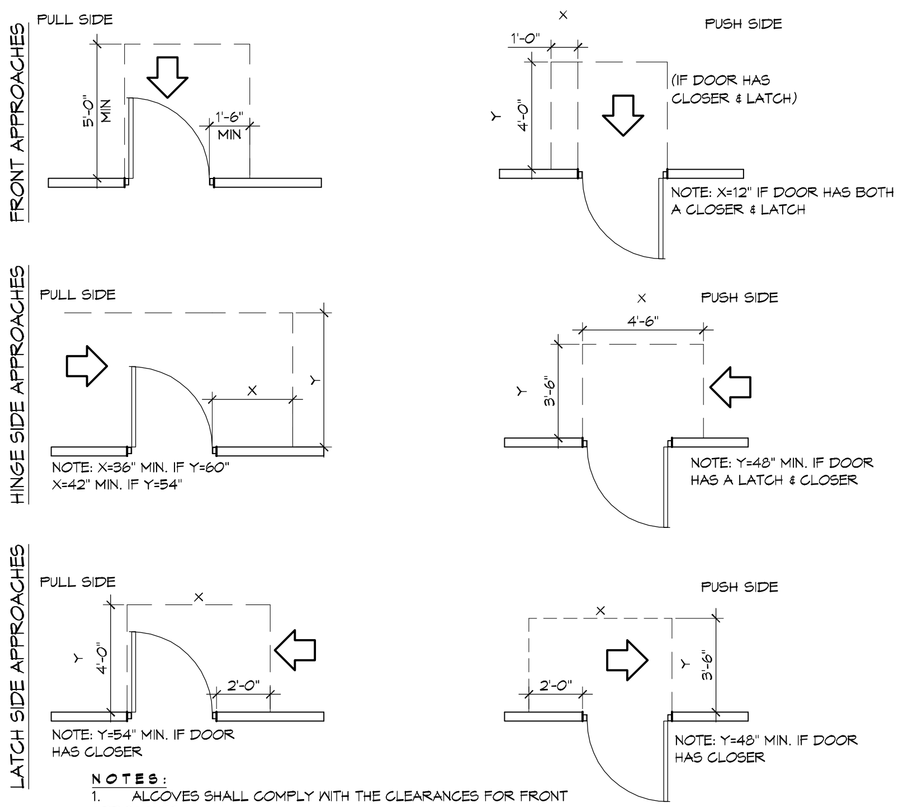

NOTES:

1. ALCOVES SHALL COMPLY WITH THE CLEARANCES FOR FRONT APROACHES.
2. DOOR HARDWARE SHALL BE THE LEVER TYPE.
3. DOORS SHALL HAVE A MAX. 8.5 LB. EXTERIOR, 5LB. INTERIOR, AND A MAX. 8.5 LB. EXTERIOR, 5 LB.

ADA DOORS

SCALE: 1/4 = 1'-0"

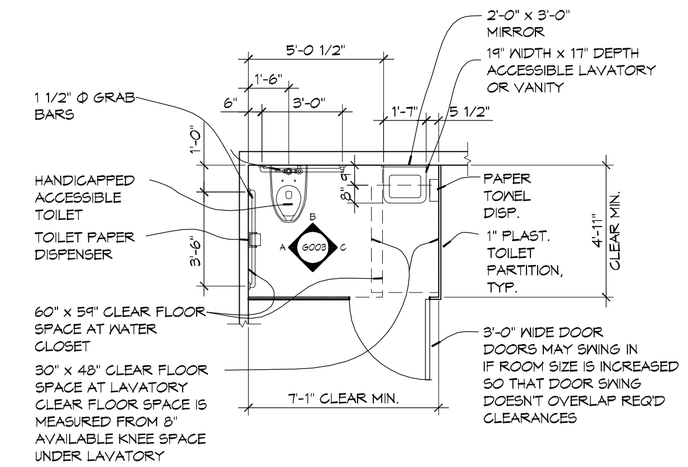

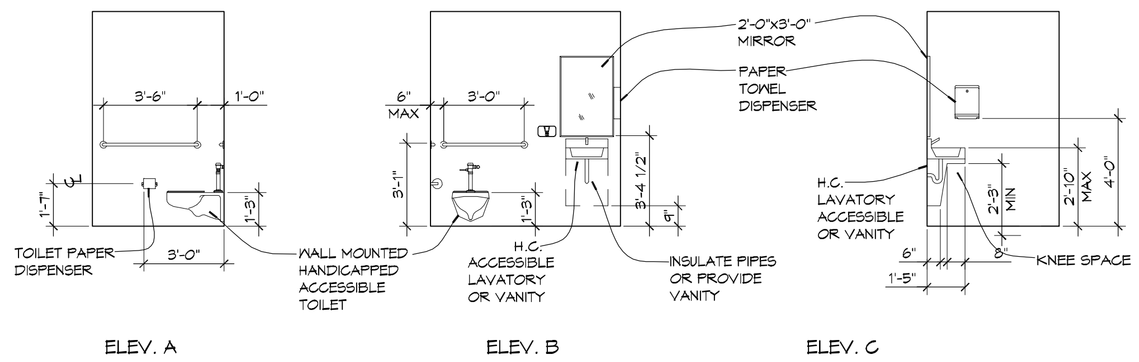

ELEV. A ELEV. B ELEV. C

TYPICAL HCP BATHROOM

SCALE: 1/4 = 1'-0"

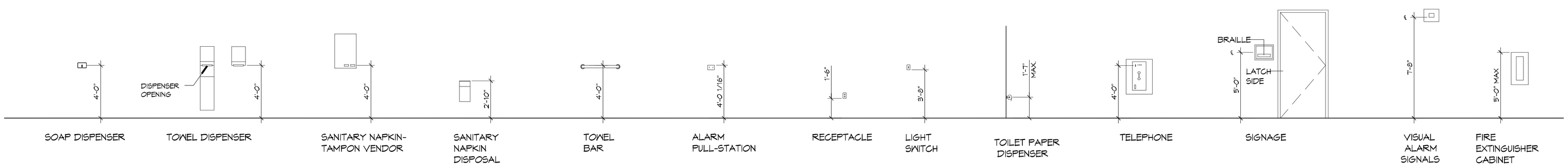

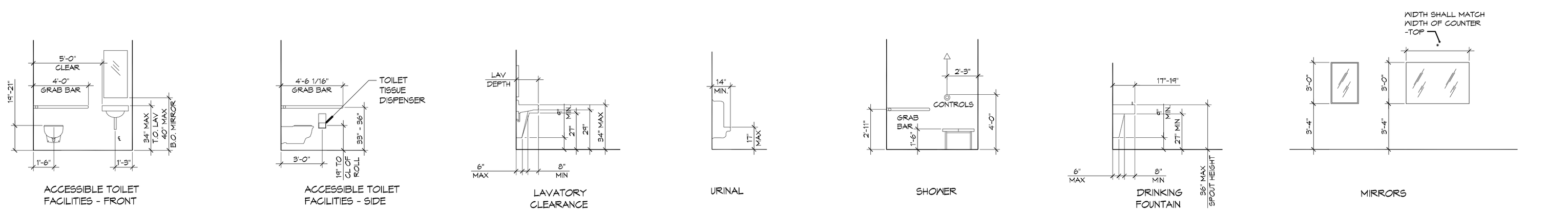

ADA MOUNTING HEIGHTS

DAMMON ENGINEERING, INC.
Architects & Engineers
www.dammonengineering.com
info@dammonengineering.com
PH: 985.649.5832
F: 985.641.5950
Chief Architect: Kevin J. Hoschen, NCARB
Chief Engineer: Brian Mistich, PE
554 Old Spanish Trail
Slidell, LA 70458

#	DESCRIPTION	DATE

REVISIONS

SEAL:

AS-BUILTS

CITY OF SLIDELL
THIRD STREET / TOM VETERANS PARK
2602 2nd STREET
SLIDELL, LOUISIANA, 70458

This drawing is the property of Dammon Engineering, and shall remain the property of Dammon Engineering, and shall remain the property of Dammon Engineering. The reproduction, alteration, or use for any purpose other than those authorized by Dammon Engineering, is forbidden. Only copies from the original of this drawing marked with the original signature and seal of Dammon Engineering shall be deemed to be true and accurate copies of the original drawing.

JOB No:	2170
DATE:	4/2/2014
DRAWN BY:	KJK
CHECKED BY:	KJK

SHEET TITLE:
ADA HANDICAP REQUIREMENTS

DRAWING NUMBER:
G2

SHEET No: 2 of 8