CONCRETE MIX DESIGN

MIX FOR ONE CUBIC YARD OF FIBER-REINFORCED CONCRETE

28 DAY STRENGTH	4000 PSI
CEMENT (ASTM C-150, TYPE I/II)	4.64 SACKS (436 LBS.)
FLY ASH (ASTM C-618)	1.16 SACKS (109 LBS.)
GRAVEL (ASTM C-33, GRADE A)	1775 LBS.
SAND (ASTM C-33)	1226 LBS.
WATER (POTABLE)	30 GALLONS (250 LBS.)
TYPE A WATER REDUCER (ASTM C-494	16.35 LBS.
AIR ENTRAINMENT	5% BY VOLUME, USE PER MANUFACTURERS SPECIFICATIONS
FIBER REINFORCEMENT	NOVA MSEH, OR EQUAL (APPROVED IN WRITING BY THE CITY ENGINEER)

ALL CONCRETE PAVEMENT PLACED FOR ROADWAY CONSTRUCTION SHALL INCLUDE "NOVA MESH" (OR EQUAL) POLYPROPYLENE FIBER REINFORCEMENT APPLIED AT A RATE OF ONE AND ONE-HALF (1½) BAGS PER CUBIC YARD OF CONCRETE. POLYPROPYLENE FIBER REINFORCEMENT SHALL BE APPLIED AT THE PLANT. THE BAGS MUST BE BROKEN BEFORE MIXING. BAG SIZE SHALL BE ONE (1) POUND.

CONTRACTOR SHALL FURNISH ALL MATERIALS, LABOR, AND EQUIPMENT NEEDED TO CONSTRUCT HANDICAP RAMPS, AT INTERSECTIONS, MEDIANS, OR AS DIRECTED BY THE CITY ENGINEER. THE CONCRETE USED TO CONSTRUCT THE RAMPS SHALL BE SIX (6") INCH THICK 4000-PSI AT 28 days. WHERE NECESSARY OR AS DIRECTED BY THE CITY ENGINEER, EXISTING SIDEWALK SHALL BE REMOVED AND REPLACED WITH NEW PORTLAND CEMENT CONCRETE SIDEWALK AND TRUNCATED DOME TILE, AS STIPULATED ACCORDING TO AMERICAN DISABILITY ACT REQUIREMENT.
TRUNCATED DOME TILE SHALL BE MINIMUM ¼-INCH THICK WITH EMBEDDED TRUNCATED DOMES, 3-INCHES ON CENTER THROUGH ENTIRE LENGTH OF TILE. TILE SURFACE SHALL BE COVERED WITH PROTECTIVE PLASTIC SHEETING. EACH HANDICAP RAMP SHALL CONSIST OF ONLY ONE TILE, WHICH SHALL BE ANCHORED INTO THE CONCRETE. THESE ARE A NO DIRECT PAY ITEM.

NOTES:

1) SIDEWALKS SHALL BE LOCATED AS NOTED. FIELD VERIFY WITH CITY ENGINEERING AND DAMMON ENGINEERING PRIOR TO FORMING. SCALING DIMENSION TO PRELIMINARY LOCATE SIDEWALKS IS PERMITTED.
2) ALL SIDEWALKS SHALL BE CONSTRUCTED OF PORTLAND CEMENT CONCRETE AND HAVE A MINIUMUM THICKNESS OF 4".
3) SAND BASE COURSE (TYP.) SHALL HAVE A MINIMUM OF 6" THICK COMPACTED TO 95% STANDARD PROCTOR.
3) PROVIDE SYNTHETIC FIBER REINFORCING IN ACCORDANCE WITH ASTM C 1116 IN ALL CONCRETE SIDEWALKS.
4) ALL SIDEWALKS SHALL BE SCORED TO A DEPTH OF 3/4" AT FIVE FOOT INTERVALS.
5) ALL SIDEWALKS SHALL BE SLOPED 3/4" MAX CROSS SLOPE TO THE ADJANCENT STREET OR DRIVEWAY.
6) PROVIDE DETECTABLE WARNING SYSTEM (CAST IN PLACE) WHERE NEW SIDEWALKS TERMINATE INTO EXISTING STREETS AS NOTED.
7) DRAIN PIPE & FITTINGS SHALL BE POLYVINYL CHLORIDE PLASTIC PIPE, MEETING CLASS 100 C-900 PVC.
8) ELEVATIONS SHOWN ARE M.S.L.
9) FIELD VERIFY ALL ELEVATIONS AND DRAINAGE SYSTEM PLACEMENT PRIOR TO START OF WORK.

TRAFFIC CONTROLS:

ANY WORK WITHIN THE ROADWAY OR ADJACENT TO THE ROADWAY CAUSING AN INTERFERENCE TO VEHICULAR TRAFFIC REQUIRES PRIOR APPROVAL FROM THE CITY OF SLIDELL, AND MUST CONFORM TO THE REQUIREMENTS SET FORTH BY THE MANUAL OF UNIFORM TRAFFIC CONTROL DEVICES. THE CONTRACTOR MUST FURNISH ALL NECESSARY TRAFFIC SIGNS AND/OR BARRICADES AND MAINTAIN THEM DURING CONSTRUCTION ACTIVITY.

LEGEND

- # 0.00' - NEW ELEVATION
- # 0.00 - EXISTING TOPO
- DETECTABLE WARNING SYSTEM (CAST IN PLACE)
- NEW 4' SIDEWALK
- NEW DROP INLET
- NEW 15" RCP

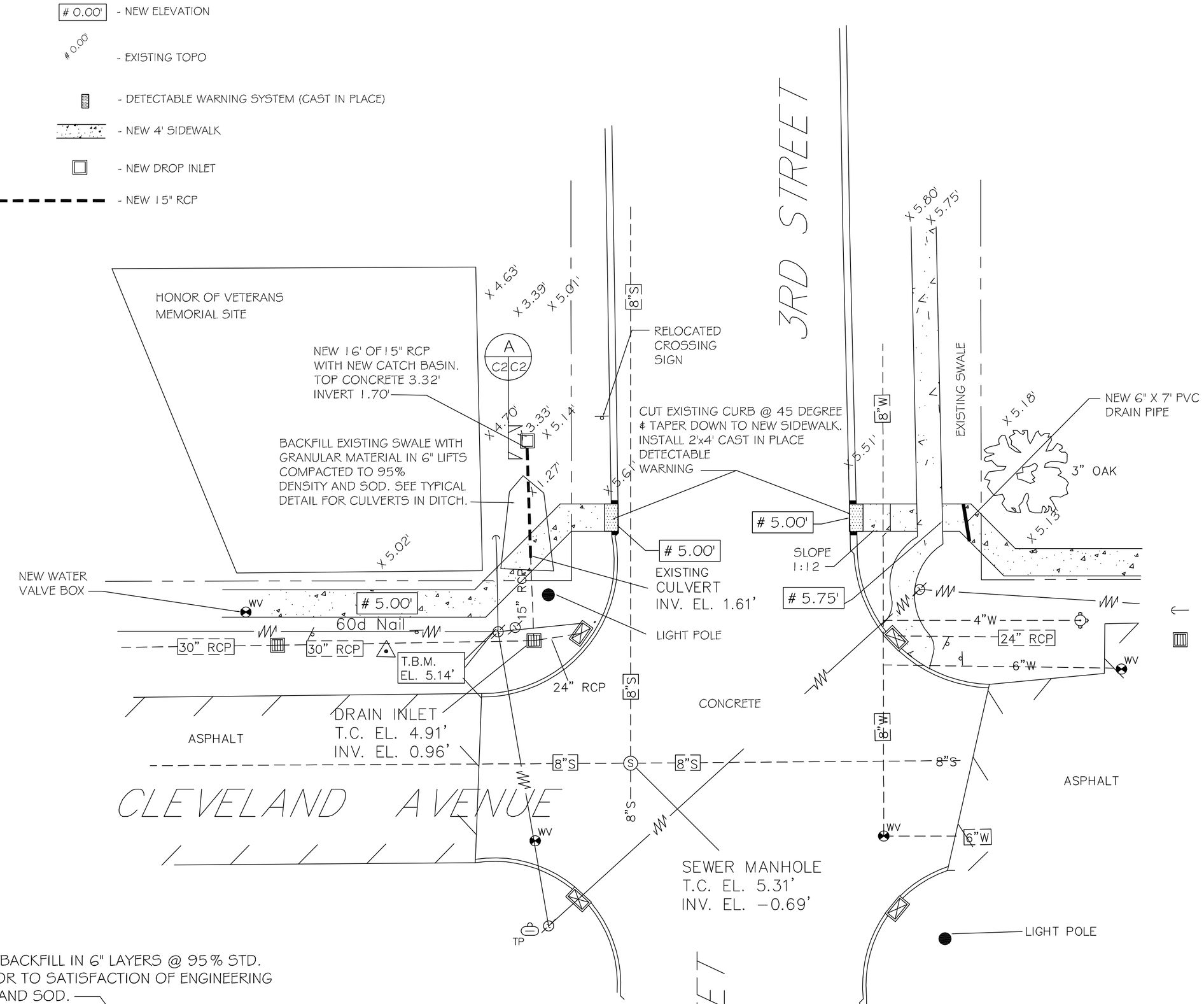

PARTIAL SITE PLAN
SCALE: 1" = 10'

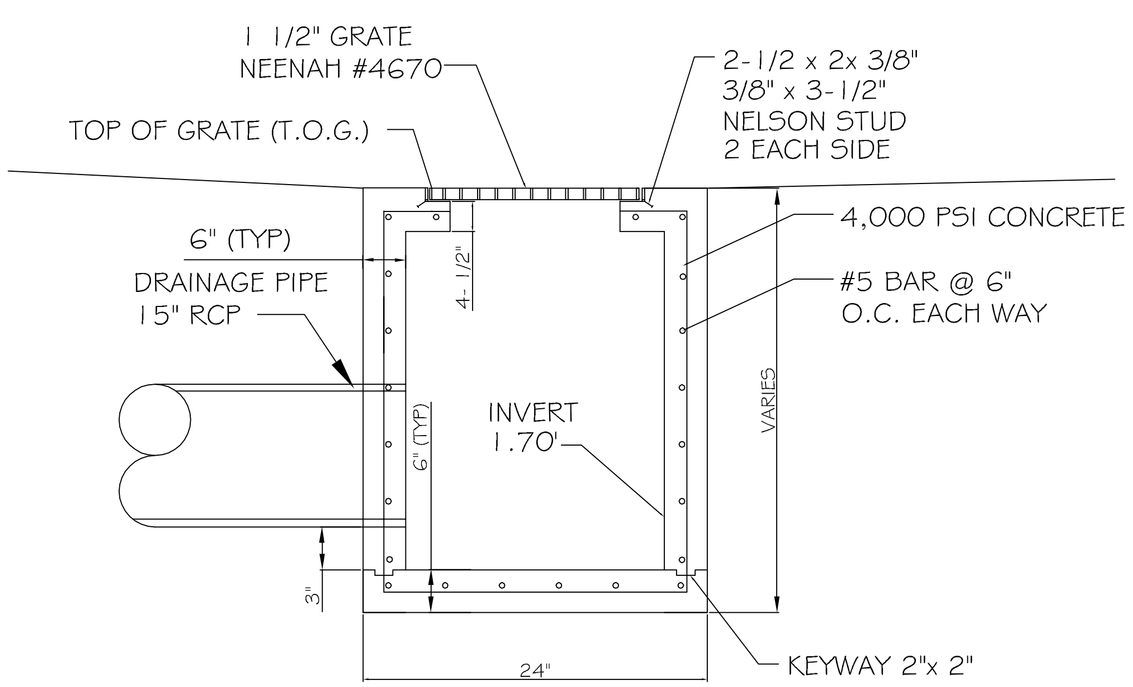

SECTION A C2 C2
SCALE: N.T.S.

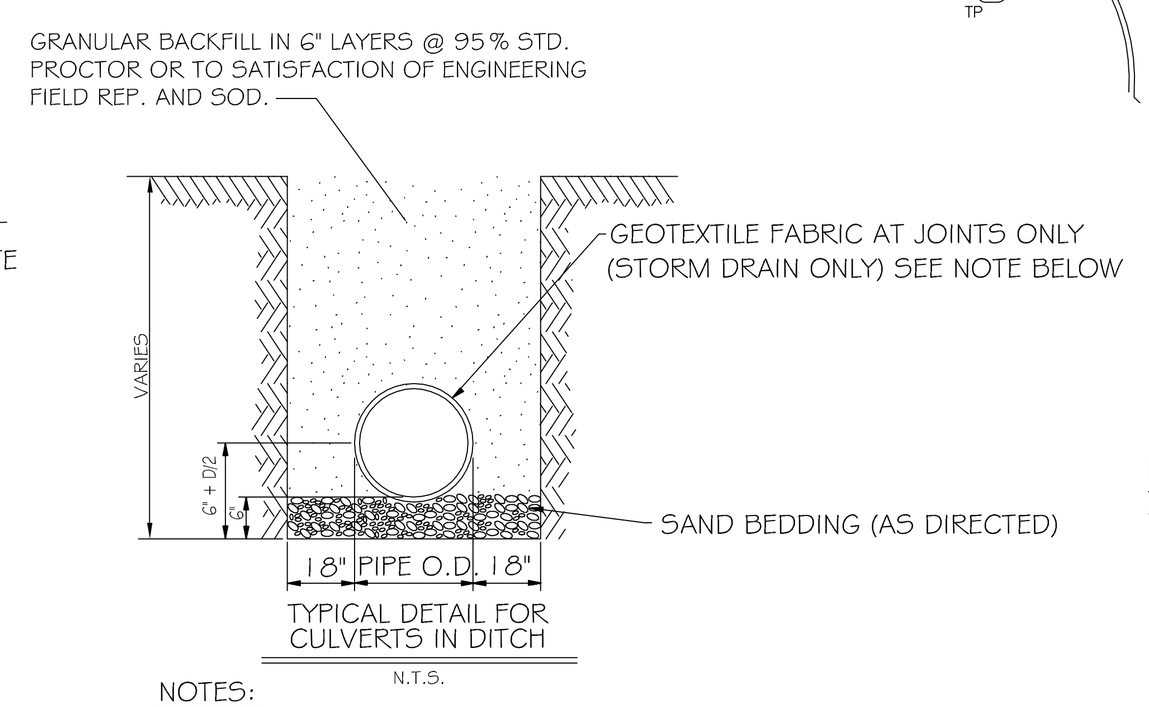

TYPICAL DETAIL FOR CULVERTS IN DITCH
N.T.S.

NOTES:

1. ALL GEOTEXTILE FABRIC TO BE 3'-0" WIDE AND TO OVERLAP NO LESS THAN 1/2 OF PIPE DIAMETER. COST OF FABRIC IS TO BE ABSORBED IN THE UNIT PRICE OF DRAIN PIPE AND SHALL NOT BE MEASURED FOR SEPERATE PAYMENT.
2. ADDITIONAL BEDDING MATERIAL MAY BE REQUIRED AS DIRECTED BY THE ENGINEER.
3. TIMBER PLANKING UNDER CULVERTS MAY BE REQUIRED BY ENGINEER.

DAMMON ENGINEERING, INC.

CHIEF ENGINEER
EMMETT DAMMON, P.E.

CHIEF ARCHITECT
ROBERT WILTSE

554 OLD SPANISH TRAIL
SLIDELL, LA. 70458
OFFICE: 985-649-5832
FAX: 985-641-5950

WEBSITE:
WWW.DAMMONENGINEERING.COM

EMAIL:
DAMMONENG@BELLSOUTH.NET

ARCHITECTURE
ENGINEERING
STUDIES
PLANNING
INVESTIGATION
EXPERT WITNESS

CITY OF SLIDELL LOUISIANA

CDBG SIDEWALK IMPROVEMENTS FY11

CLEVELAND AVE.

REV:

SCALE: AS NOTED
JOB#:2129
DATE: 03-28-12
SHEET 3

C-2

OF 4