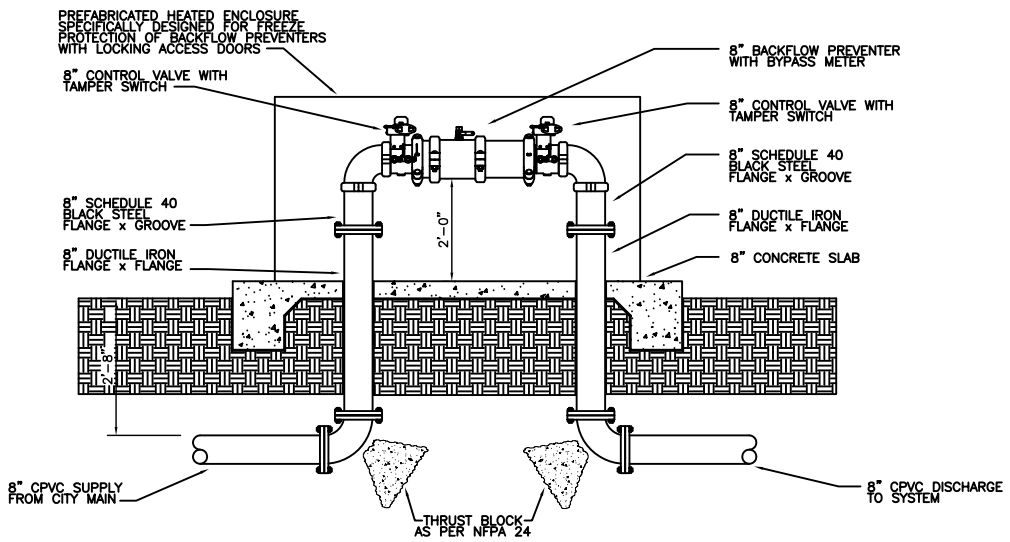

BACKFLOW PREVENTER DETAIL
NOT TO SCALE

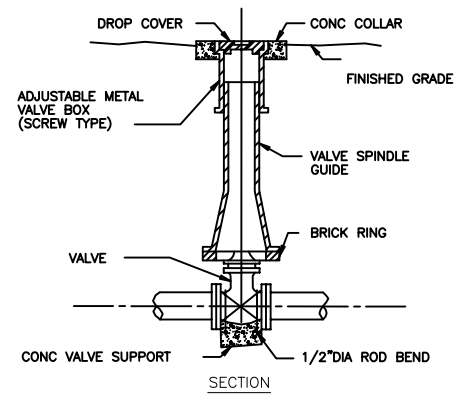

VALVE BOX
NOT TO SCALE

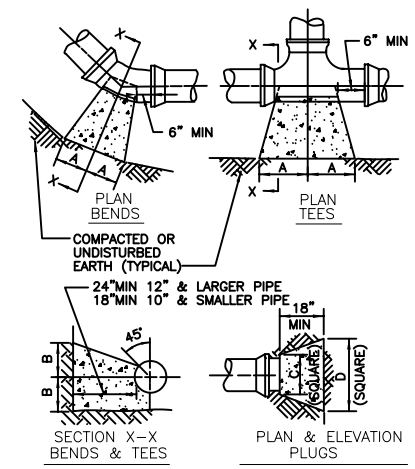

SIZE	1/4 BENDS		1/8 BENDS		1/16 BENDS		TEES		PLUGS	
	A	B	A	B	A	B	A	B	C	D
6"	16"	10"	9"	10"	6"	8"	10"	12"	10"	21"
8"	22"	13"	12"	13"	8"	10"	13"	16"	12"	29"
10"	26"	17"	14"	17"	10"	13"	16"	20"	14"	36"
12"	29"	21"	16"	21"	11"	16"	18"	24"	16"	41"
14"	35"	24"	19"	24"	12"	20"	22"	27"	18"	48"
16"	38"	27"	21"	27"	12"	24"	24"	30"	20"	54"

THRUST BLOCKS
NOT TO SCALE

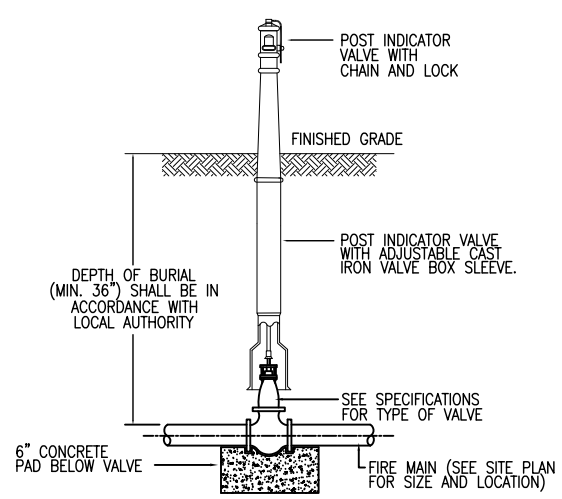

POST INDICATOR VALVE W/ VALVE BOX DETAIL
NOT TO SCALE

NOTE:
PROVIDE POST INDICATOR VALVES WITH TAMPER SWITCH, ALARM AND MONACO TRANSMITTER SYSTEM.

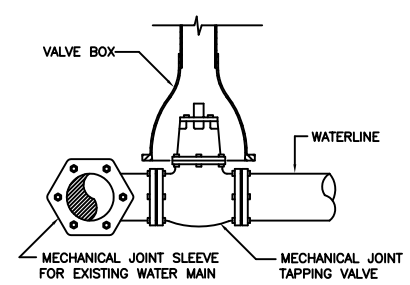

DETAIL–TAPPING SLEEVE
NOT TO SCALE

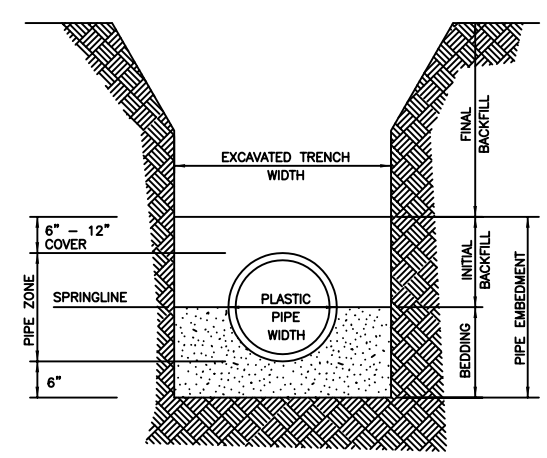

NOTE: PROVIDE BEDDING IN ACCORDANCE WITH THE SPECIFICATIONS.

TRENCH FOR PLASTIC PIPE
NOT TO SCALE

SYM	DESCRIPTION	DATE	APPR

NAVFAC

DAMMON ENGINEERING, INC.
CHIEF ENGINEER EMMETT DAMMON, P.E.
CHIEF ARCHITECT ROBERT WILTSE
1095 FLORIDA AVENUE
SLIDELL, LA 70458
(985) 649-5832
APRIL 26, 2010

REVIEWED BY: R. WILTSE
PM/DM:
CHIEF ENG/ARCH. P. DAMMON

DEPARTMENT OF THE NAVY
NAVAL FACILITIES ENGINEERING COMMAND
NAVAL FACILITIES ENGINEERING COMMAND SOUTHEAST
NAVAL AIR STATION JACKSONVILLE
IPT GULF COAST
GULFPORT
MISSISSIPPI
NAVY LODGE, NCBC GULFPORT
UTILITY DETAILS

CODE ID. NO. | SIZE D
SCALE: AS SHOWN
MAXIMO NO. ######
STA. PROJ. NO.
WORK ORDER NO.
CONSTR. CONTR. NO.
NAVFAC DRAWING NO.
SHEET OF
C2.2

DRAWFORM REVISION: 01 JAN 2009

REVDATE: FILE NAME: J:\~ Government\Navy Lodge\DRAWINGS\C2.2 UTILITY DETAILS.dwg LAYOUT NAME: Layout1 PLOTTED: Wednesday, April 28, 2010 - 12:46pm