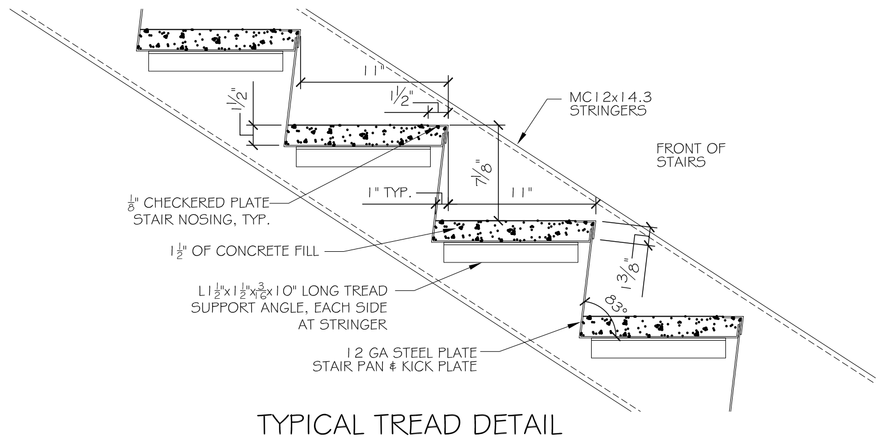


## TYPICAL TREAD DETAIL

SCALE: 1-1/2"=1'-0"

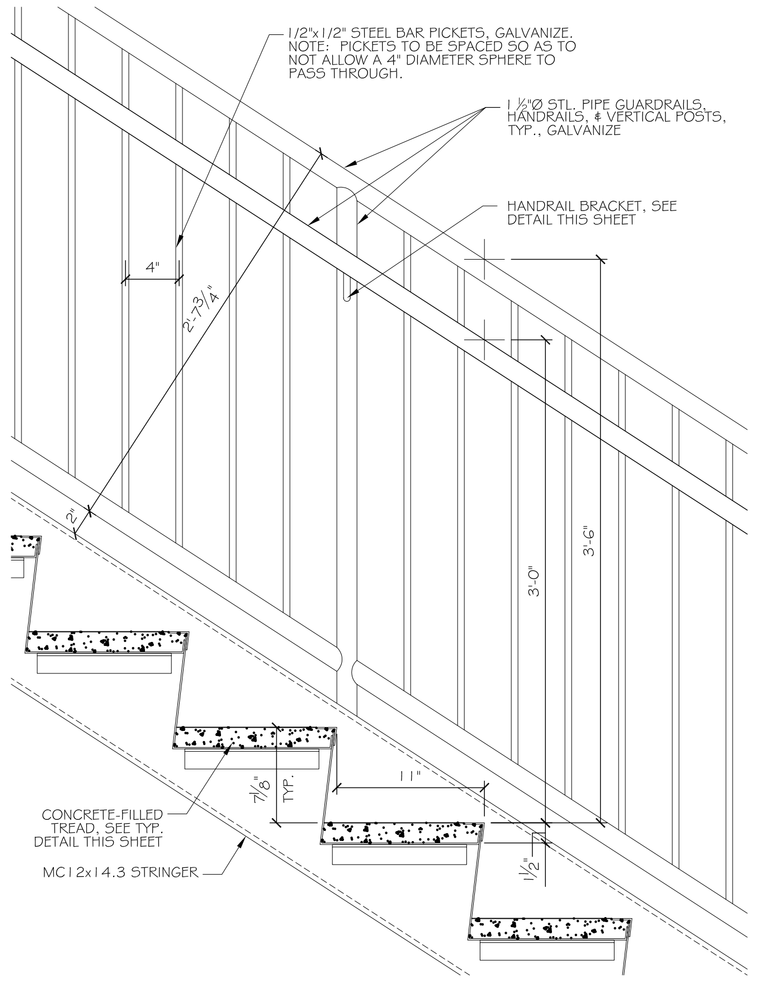


## TYPICAL GUARDRAIL DETAIL

SCALE: 1-1/2"=1'-0"

NOTES:
1. VERIFY ALL EXISTING CONDITIONS & DIMENSIONS PRIOR TO CONSTRUCTION.
2. SHOP PRIME & PAINT TO MATCH ALL STEEL WHERE WELDING OCCURS.

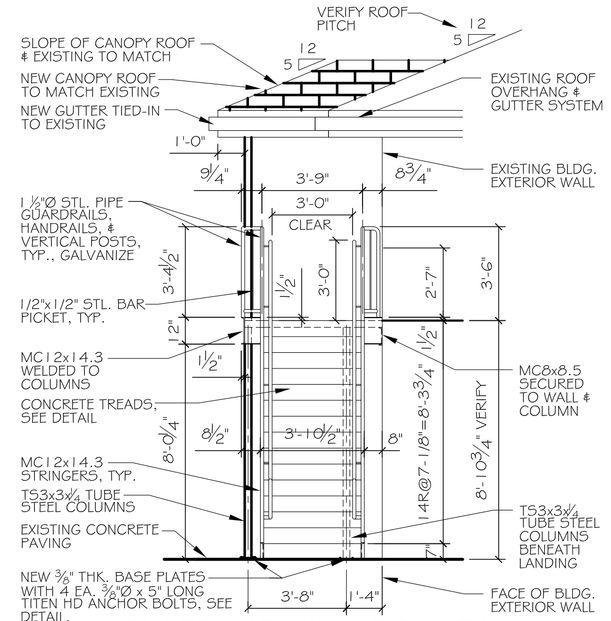


## NEW STAIRS - END ELEVATION

SCALE: 1/4"=1'-0"

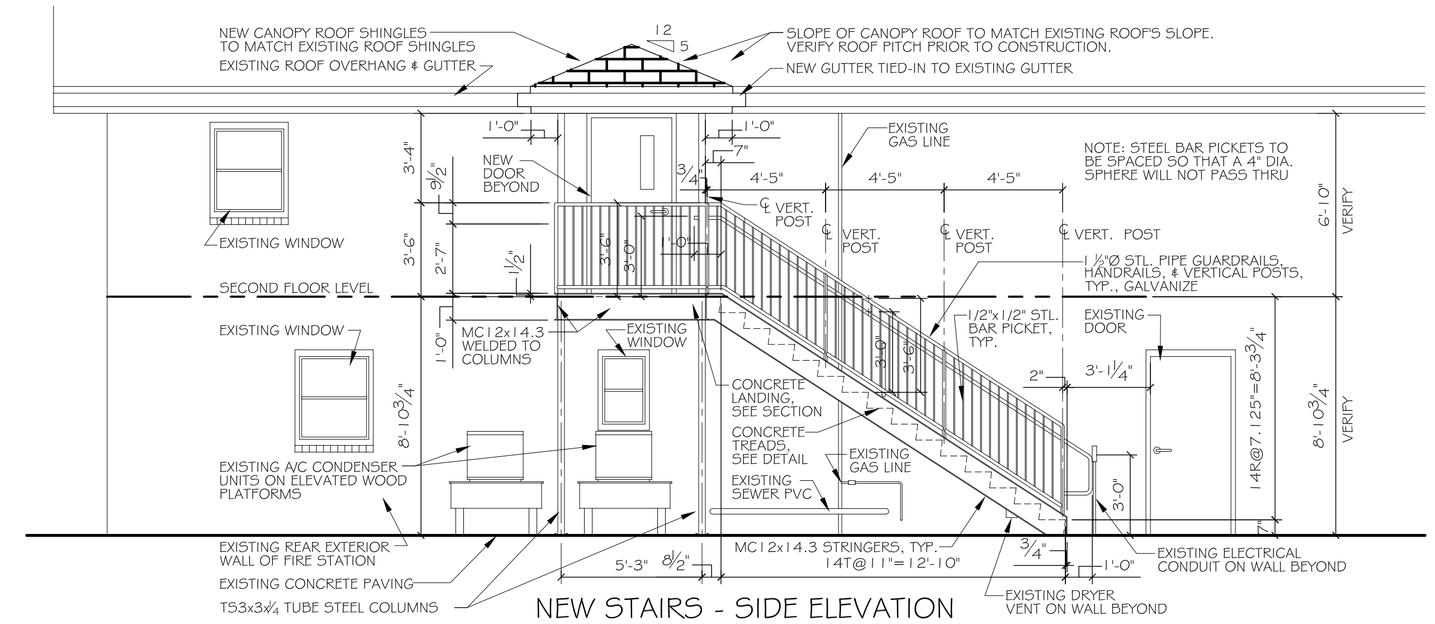


## NEW STAIRS - SIDE ELEVATION

SCALE: 1/4"=1'-0"

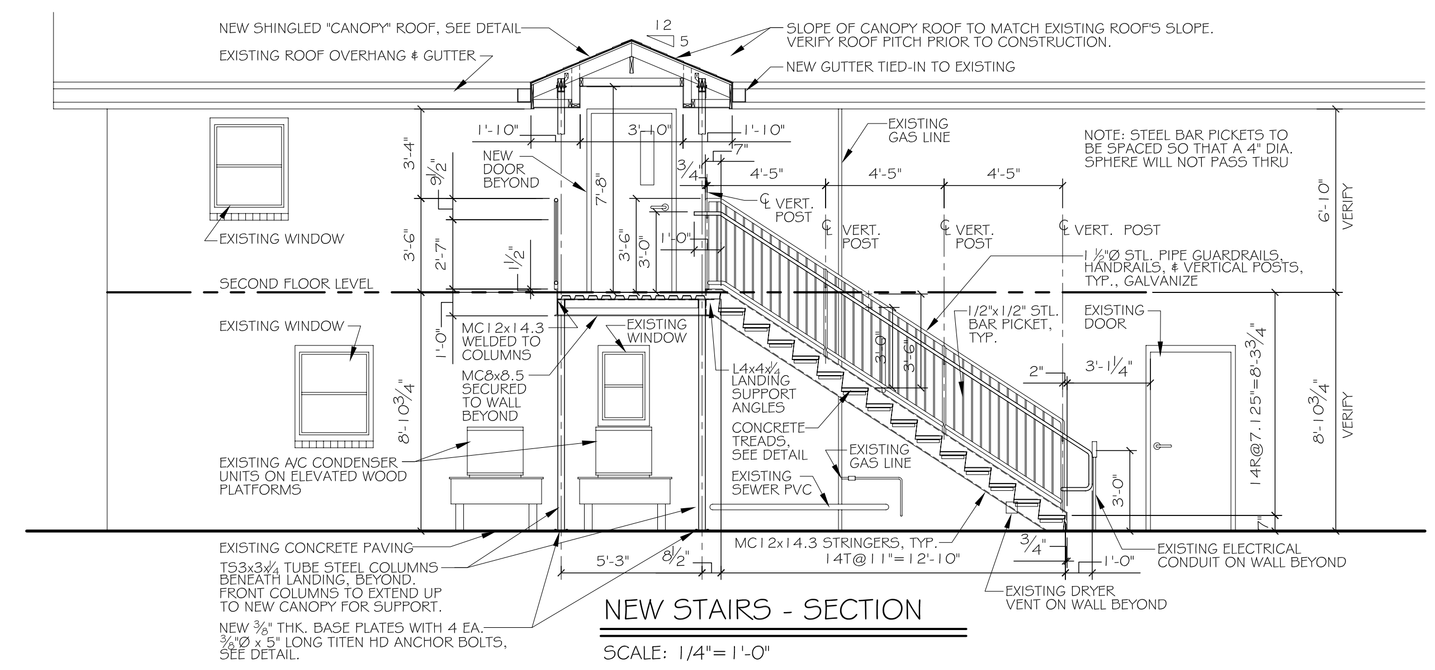


## NEW STAIRS - SECTION

SCALE: 1/4"=1'-0"

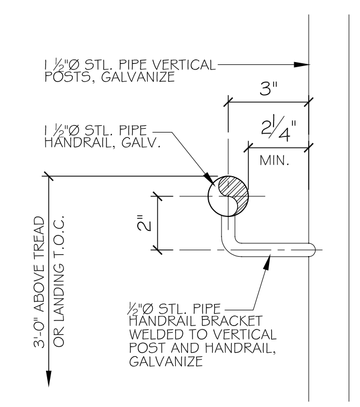


## TYPICAL HANDRAIL DETAIL

SCALE: 3" = 1'-0"

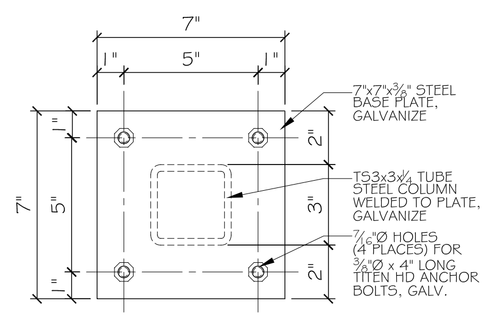


## COLUMN BASE PLATE DETAIL

SCALE: 3" = 1'-0"

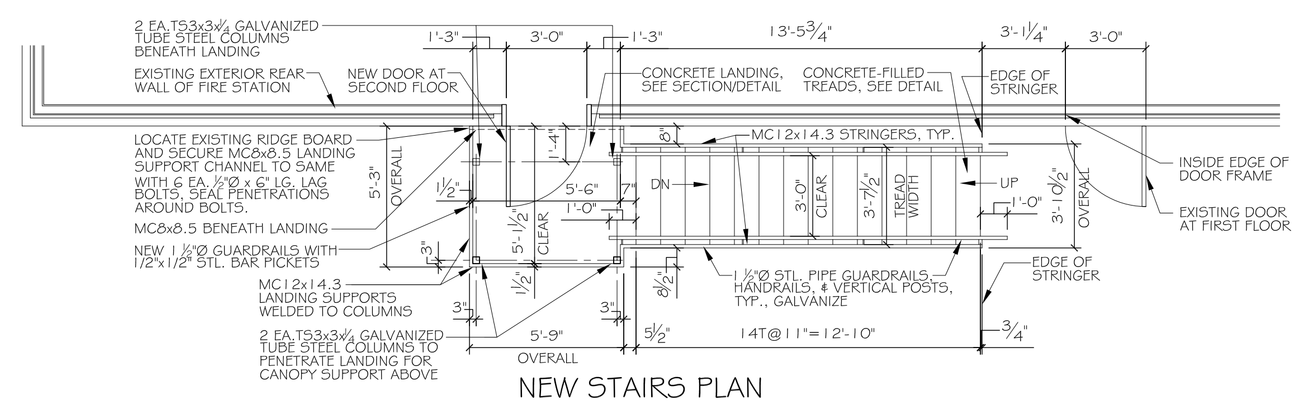


## NEW STAIRS PLAN

SCALE: 1/4"=1'-0"

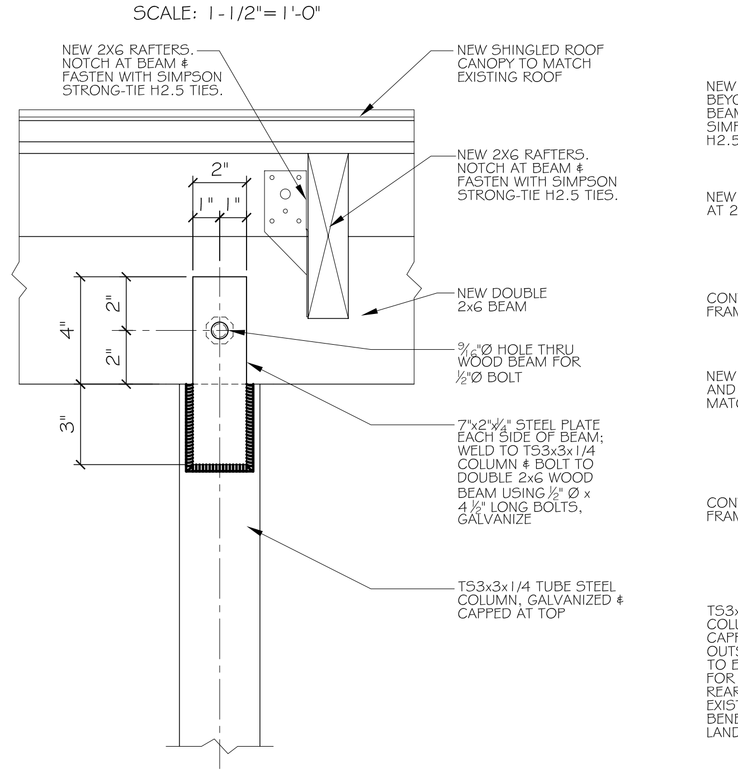


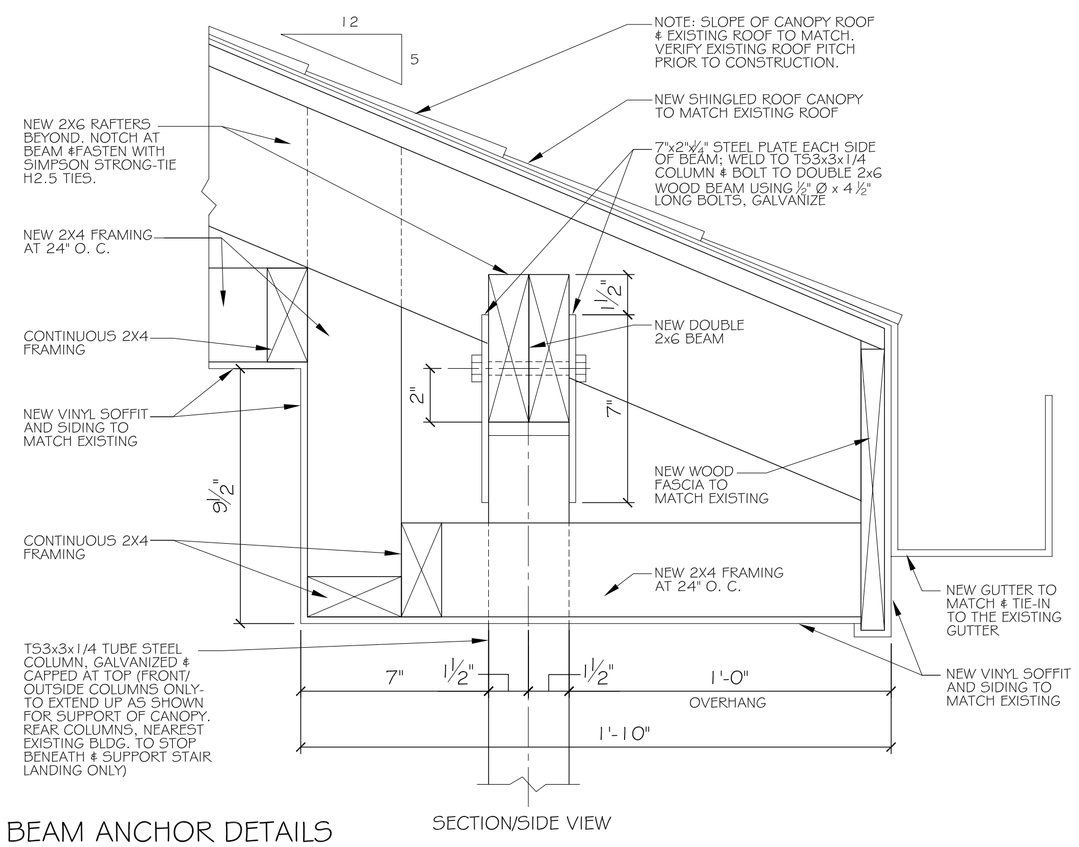


## CANOPY & COLUMN TO BEAM ANCHOR DETAILS

SCALE: 3" = 1'-0"

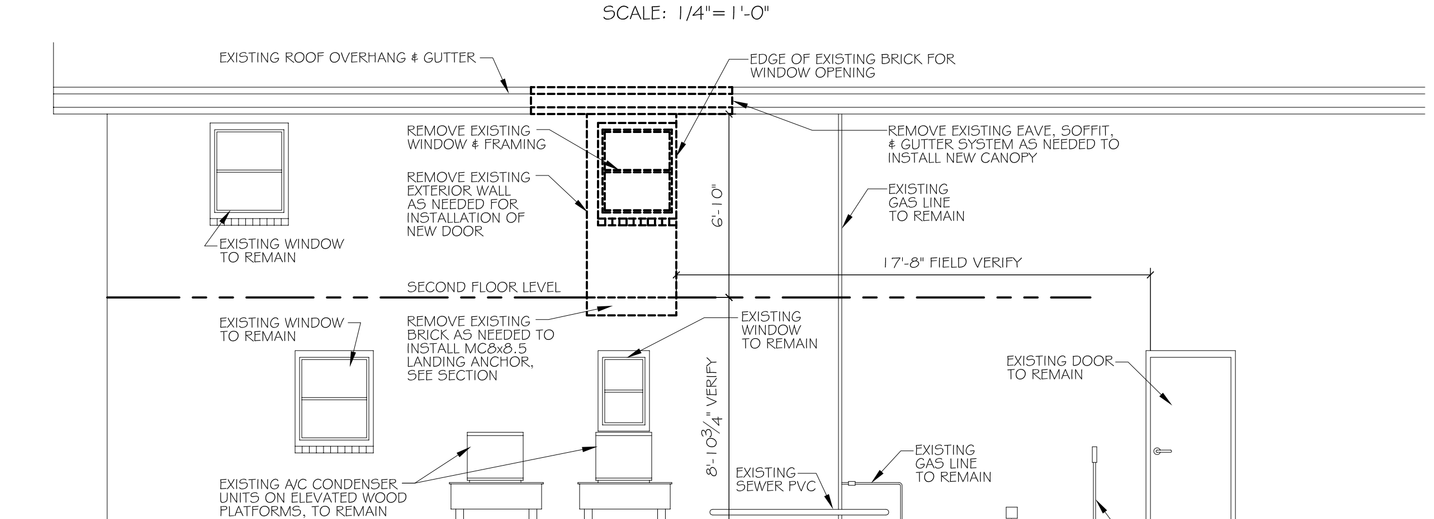


## EXISTING WALL "DEMO" ELEVATION

SCALE: 1/4"=1'-0"


DAMMON ENGINEERING, INC.
Architects & Engineers
www.dammonengineering.com
info@dammonengineering.com
PH: 985.649.5832
F: 985.641.5950
Chief Architect: Kevin J. Kinchen, NCARB
Chief Engineer: Brian Wistch, PE
554 Old Spanish Trail
Slidell, LA 70458


REVISIONS

| # | DESCRIPTION | DATE |
|---|---|---|
| | | |

SEAL:

ST. TAMMANY FIRE PROTECTION DISTRICT NO.1
NEW STAIRS ADDITION FOR:
FIRE STATION #12
PETER "PETE" PRAVATA MEMORIAL STATION
15 PO WEST TALL AVENUE
SLIDELL, LOUISIANA 70460

| | |
|---|---|
| JOB No: | 2223-1 |
| DATE: | 12-24-14 |
| DRAWN BY: | JTL |
| CHECKED BY: | CKD |


The drawings, specifications, reports and all documents prepared by and for Dammon Engineering, Inc. are instruments of service in respect of the project. They are to be used in connection with the project for which they have been prepared and may not be used for other purposes without the express written consent of Dammon Engineering, Inc. Written dimensions on drawings and specifications constitute evidence of precedence of these restrictions.


SHEET TITLE:
FLOOR PLAN

DRAWING NUMBER:
A1

SHEET No: 00 of 1