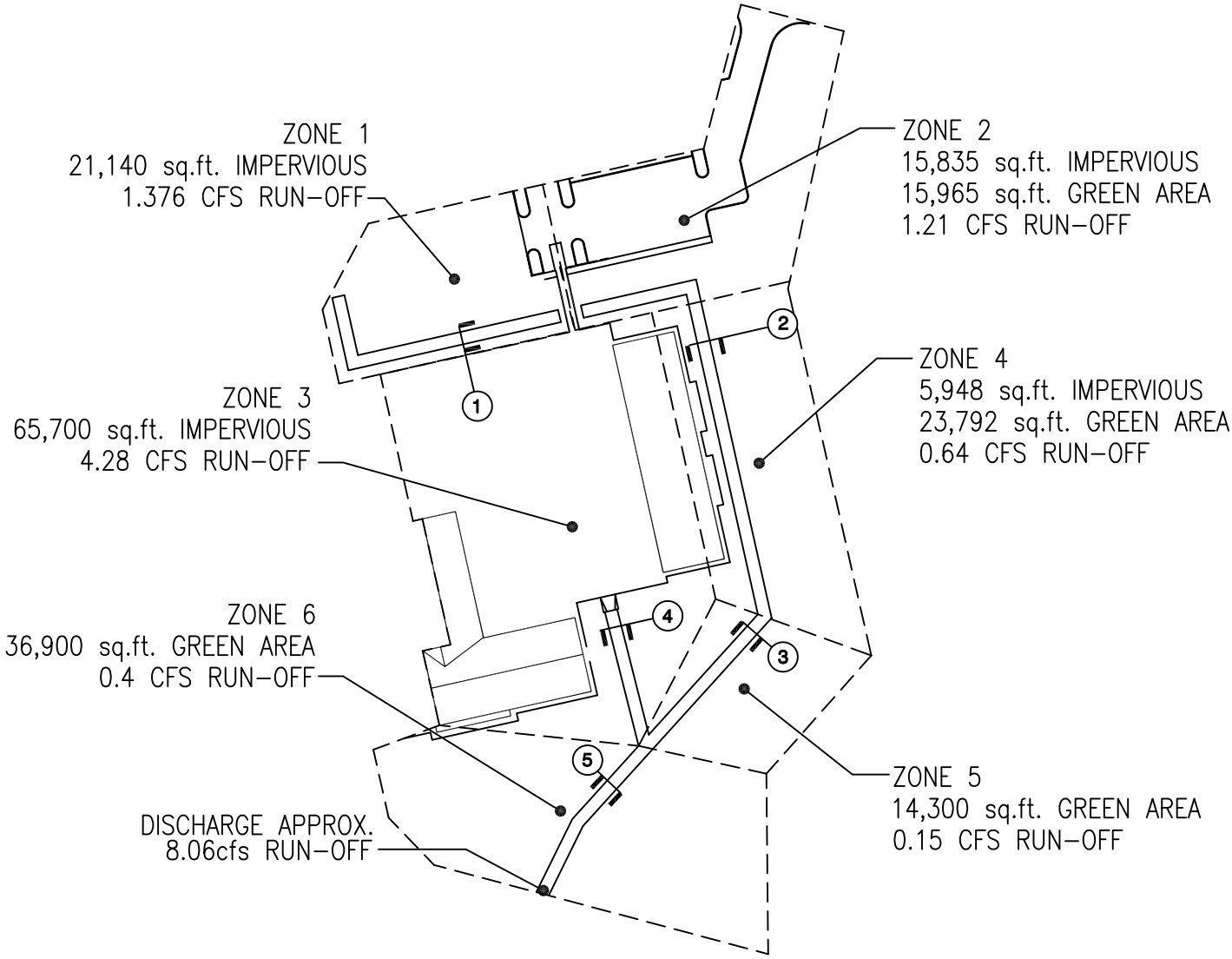

KEY PLAN OF WATERSHED SERVICED BY SWALE

N.T.S.

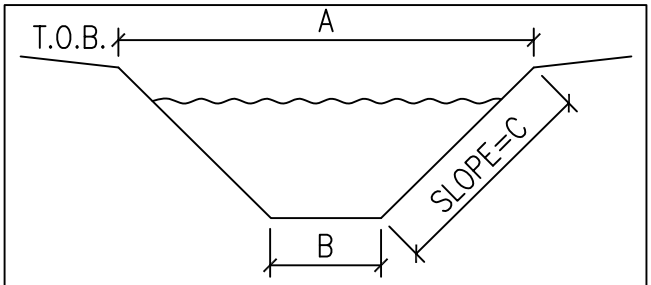

NO.	A	B	C
1	10'	2'	0.1:1
2	10'	4'	0.24:1
3	12'	4'	0.33:1
4	12'	4'	0.33:1
5	14'	4'	0.35:1

SWALE SECTION

N.T.S.