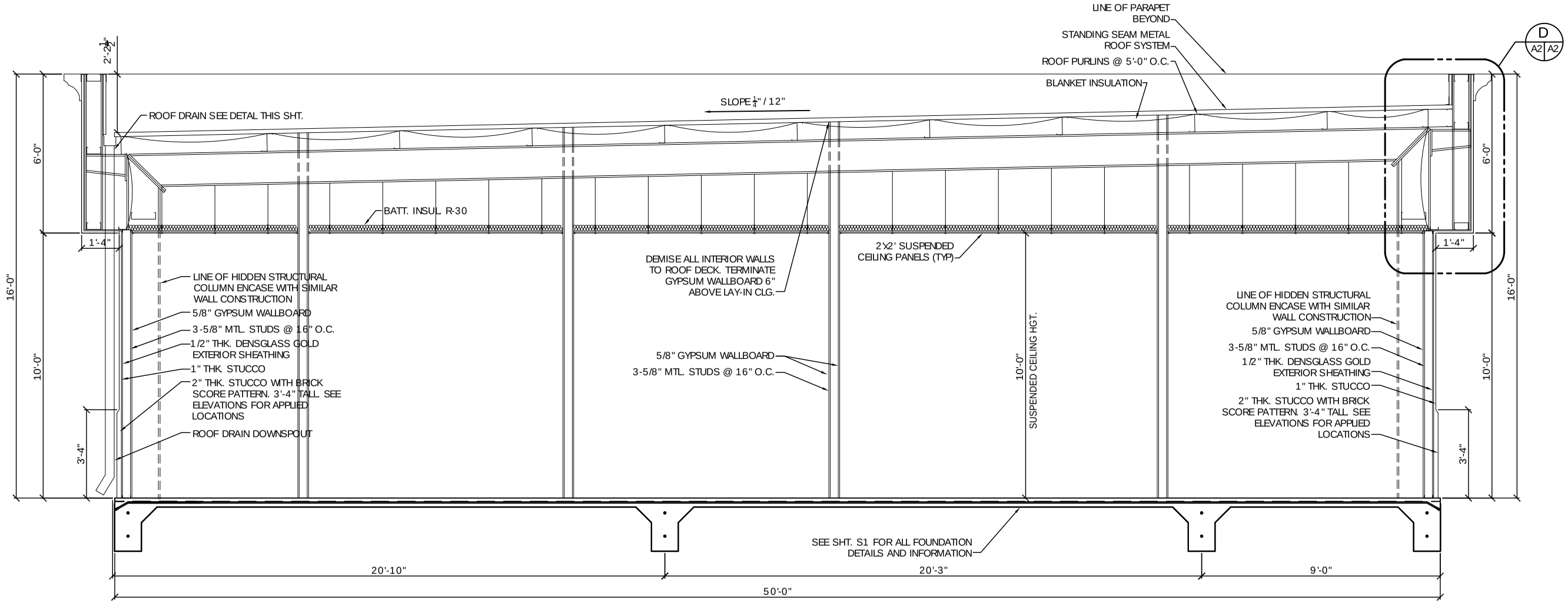

SECTION C (A1 A2)
SCALE: 1/2"= 1'-0"

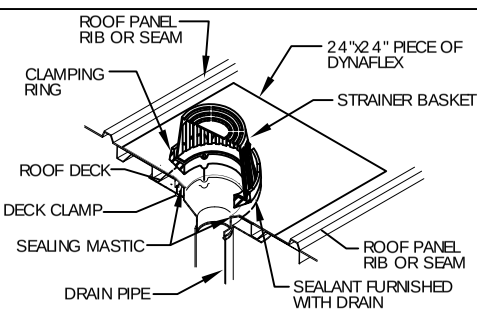

ROOF DRAIN DETAIL
N. T. S.

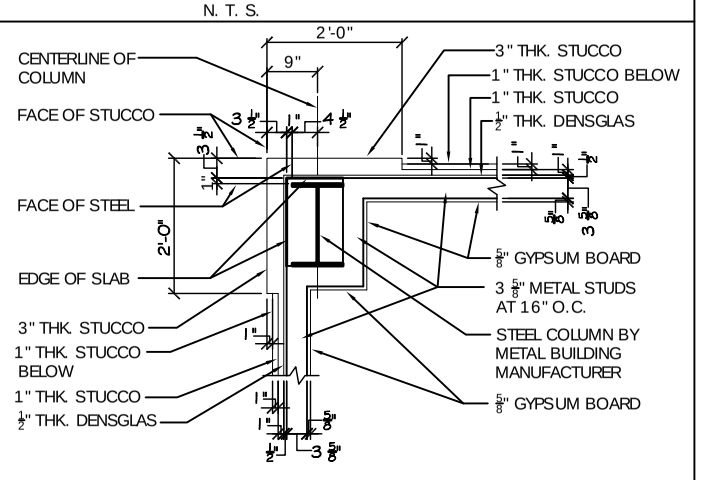

EXTERIOR CORNER PLAN DETAIL
SCALE: N.T.S.

NOT FOR CONSTRUCTION

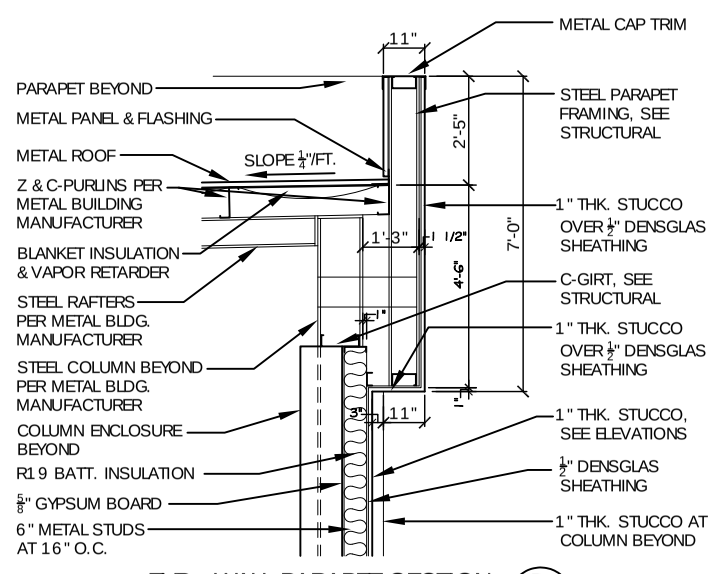

TYP. WALL PARAPET SECTION D (A2 A2)
SCALE: 1/2"= 1'

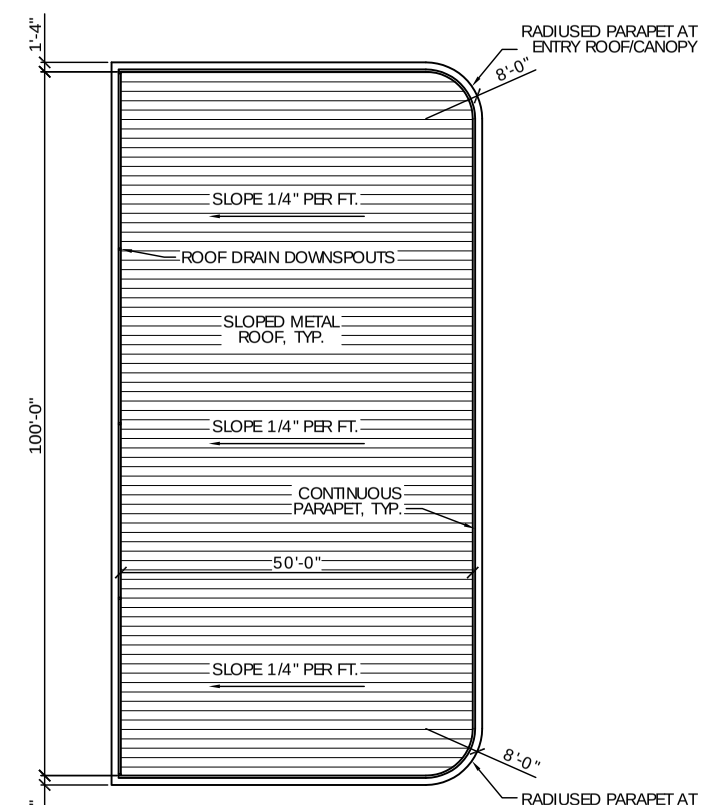

ROOF PLAN
N. T. S.

DAMMON ENGINEERING, INC

CHIEF ENGINEER
EMMETT
DAMMON, P.E.

CHIEF ARCHITECT
ROBERT
WILTSE

1095 FLORIDA AVENUE
SLIDELL, LA. 70458
OFFICE: 985-649-5832
FAX: 985-641-5950

WEBSITE:
WWW.DAMMONENGINEERING.COM

EMAIL:
DAMMONENG@BELLSOUTH.NET

ARCHITECTURE

ENGINEERING

STUDIES

PLANNING

INVESTIGATION

EXPERT WITNESS

DR. EDUARDO HERNANDEZ
HAMMOND
LOUISIANA

CHILDRENS INTERNATIONAL MEDICAL GROUP
CIMG

FLOOR PLAN

REV:

SCALE: AS NOTED

JOB#: 2042

DATE: 10-29-09

SHEET

A-1

OF