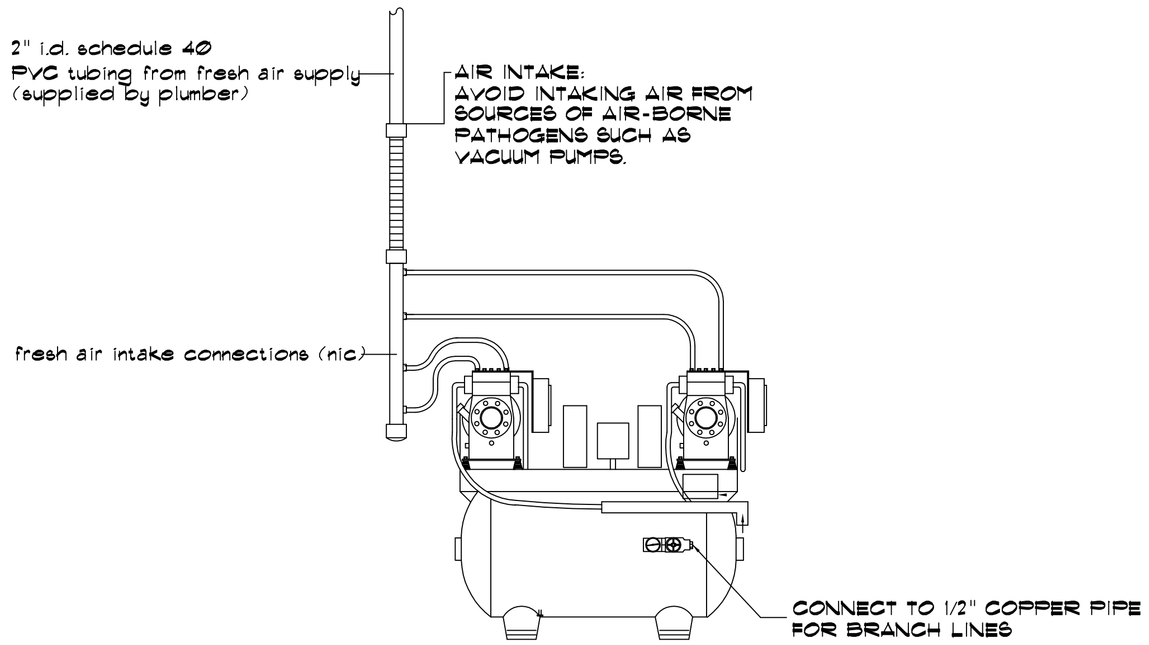

AIR COMPRESSOR
DETAIL # 1

NO. OF	VAC LINE	MAIN RIGER
OPERS.	DIAM.	TO PUMP
1	3/4"	1"
2-8	1 1/2"	1 1/2"

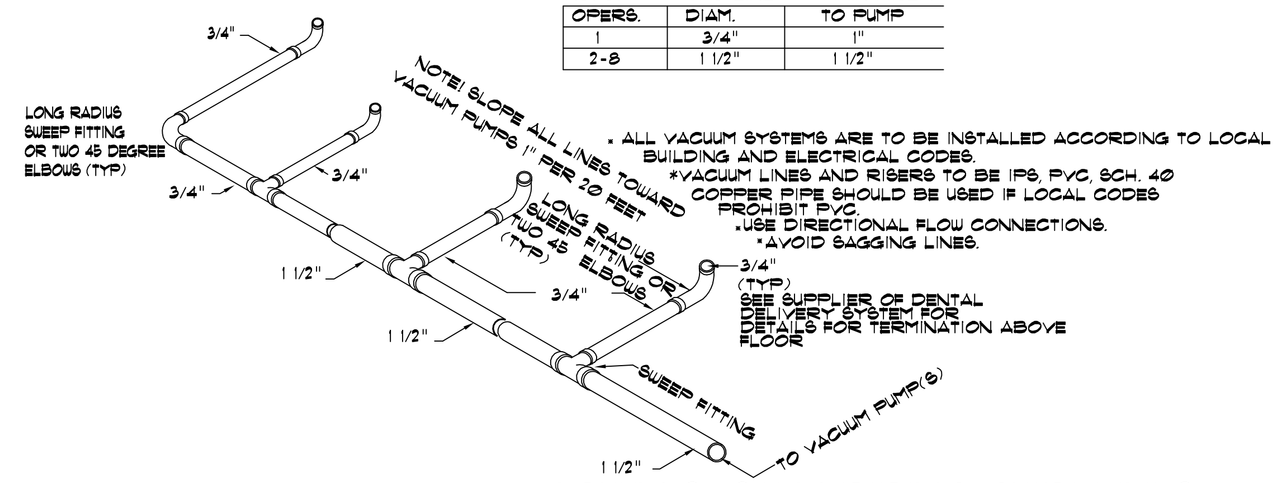

• ALL VACUUM SYSTEMS ARE TO BE INSTALLED ACCORDING TO LOCAL BUILDING AND ELECTRICAL CODES.
*VACUUM LINES AND RIGERS TO BE IPS, PVC, SCH. 40
COPPER PIPE SHOULD BE USED IF LOCAL CODES PROHIBIT PVC.
• USE DIRECTIONAL FLOW CONNECTIONS.
• AVOID SAGGING LINES.

VACUUM SYSTEM PIPING GUIDELINES
FOR UNDER FLOOR INSTALLATION
SUCTION LINE ARRANGEMENT
DETAIL # 2

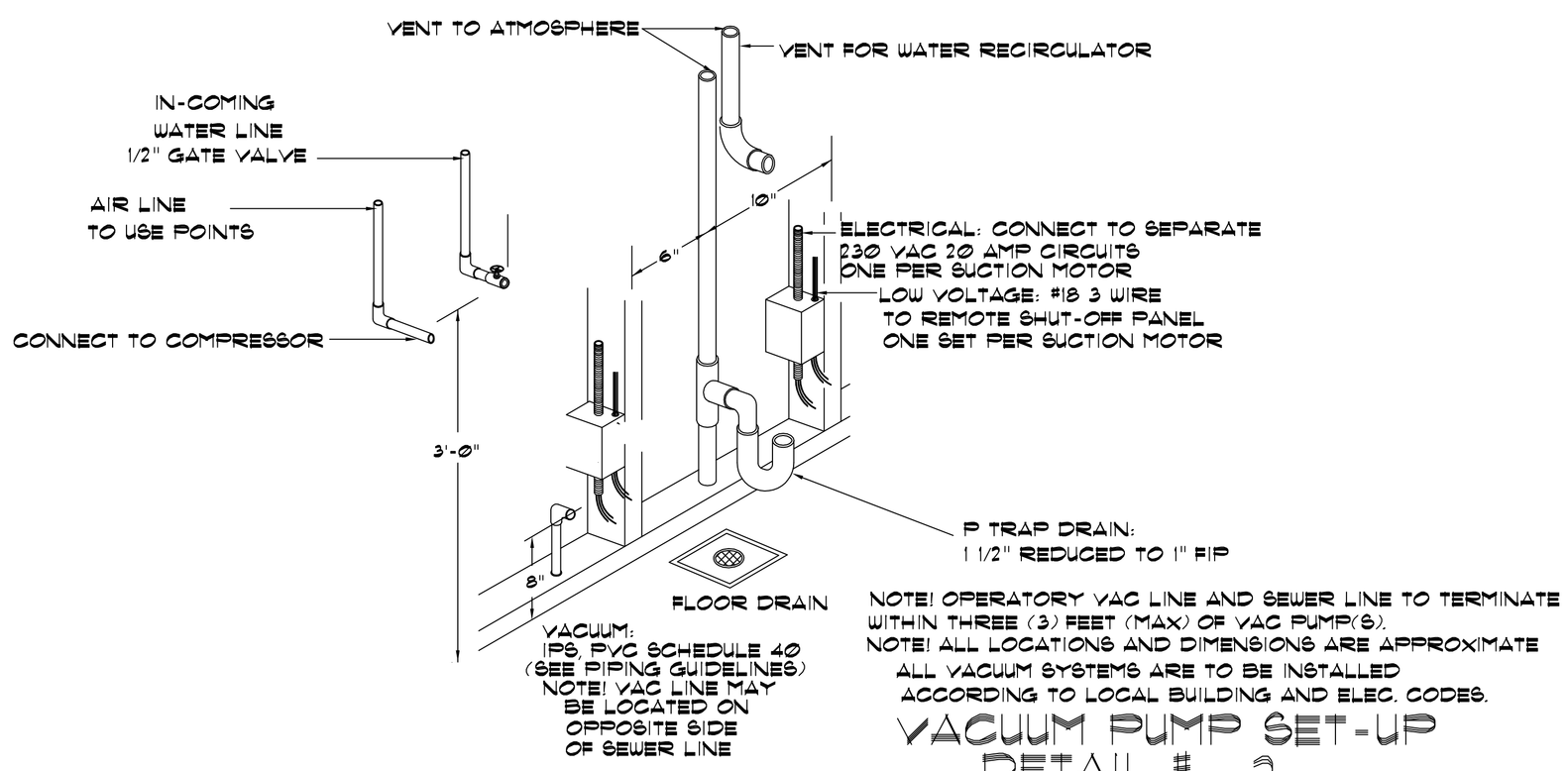

NOTE! OPERATORY VAC LINE AND SEWER LINE TO TERMINATE WITHIN THREE (3) FEET (MAX) OF VAC PUMP(S).
NOTE! ALL LOCATIONS AND DIMENSIONS ARE APPROXIMATE
ALL VACUUM SYSTEMS ARE TO BE INSTALLED ACCORDING TO LOCAL BUILDING AND ELEC. CODES.

VACUUM PUMP SET-UP
DETAIL # 3

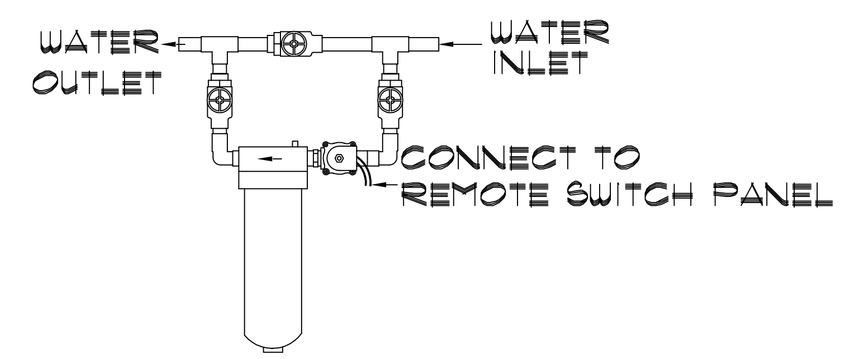

NOTE: INLET AND OUTLET MAY BE REVERSED. CHECK WITH SUPPLIER.

WATER FILTER MANIFOLD
DETAIL # 4

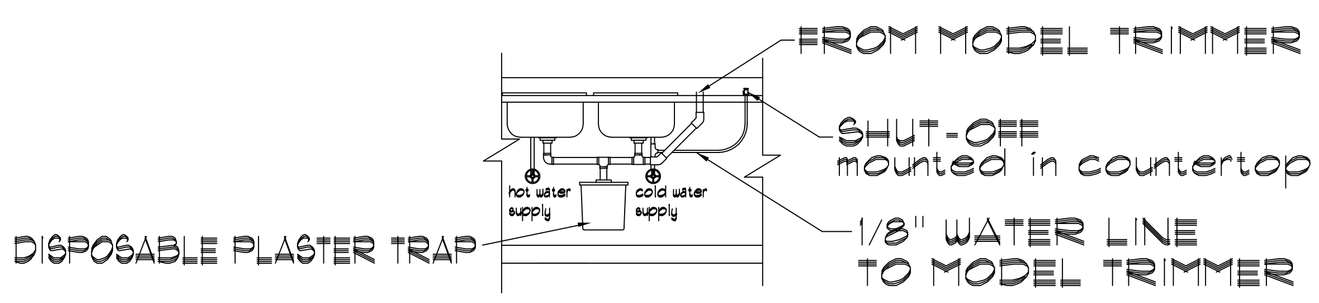

MODEL TRIMMER
DETAIL # 5

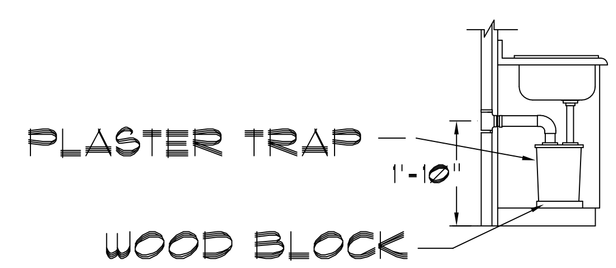

PLASTER TRAP
DETAIL # 6

PATTERSON DENTAL
107 Mallard St., Suite D
St. Rose, LA 70087
504-463-1770
FAX 504-466-9918

A NEW DENTAL OFFICE FOR
DR. AUSTIN RAHAIM
NEW ORLEANS, LA
EQUIPMENT SPECIALIST: JOHN TESSITORE

THESE DRAWINGS AND SPECIFICATIONS ARE THE PROPERTY OF PATTERSON DENTAL SUPPLY, INC. AND SUBMITTED TO THE PERSON OR FIRM TO WHOM THEY ARE ISSUED OR PERSONS NAMED HEREIN. ANY USE OR REPRODUCTION OF THESE DRAWINGS IS STRICTLY PROHIBITED WITHOUT WRITTEN PERMISSION OF PATTERSON DENTAL SUPPLY, INC. ANY ERRORS, OMISSIONS, OR DISCREPANCIES IN THESE DRAWINGS SHALL BE BROUGHT TO THE ATTENTION OF PATTERSON DENTAL SUPPLY, PRIOR TO THE COMMENCEMENT OF ANY WORK. THESE PLANS ARE NOT INTENDED TO BE ARCHITECTURAL DRAWINGS, THEY ARE INTENDED ONLY TO SHOW THE DENTAL EQUIPMENT PREPARED BY A LICENSED ARCHITECT OR ENGINEER. CONSULT LOCAL AUTHORITIES TO VERIFY ADDITIONAL REQUIREMENTS. ALL WORK MUST BE PERFORMED IN COMPLIANCE WITH ALL STATE AND LOCAL CODES PERTAINING TO THE CONSTRUCTION OF THIS PROJECT.

Project No.:	345-4552-D1
Date:	AUGUST 30, 2012
Detailed By:	DERRICK L. FRANKLIN
Sheet:	DENTAL EQUIPMENT DETAILS
Scale:	NO SCALE
Issue:	
Revision: 1:	
2:	
Sheet No.:	D1