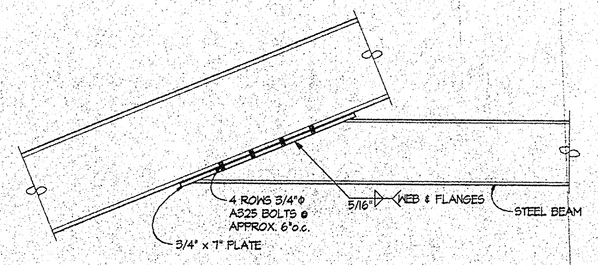

1/ SECTION
3/4" = 1'-0"

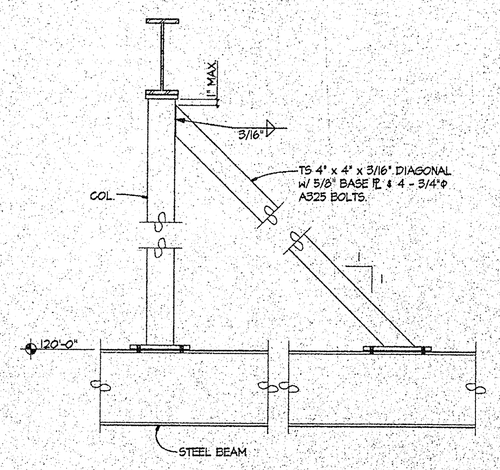

2/ SECTION
3/4" = 1'-0"

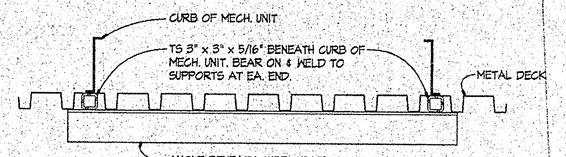

ANGLE BENEATH CURB OF MECH. UNIT WELDED TO TS.
3" x 3" x 5/16" FOR ANGLE LENGTH TO 5'-0".
6" x 3 1/2" x 5/16" FOR ANGLE LENGTH GREATER THAN 5'-0".

NOTE : SUPPORT FOR OPENINS IN METAL DECK (SEE STRUCTURAL NOTES) MAY BE ATTACHED TO THIS FRAMING.

3/ SECTION
NO SCALE

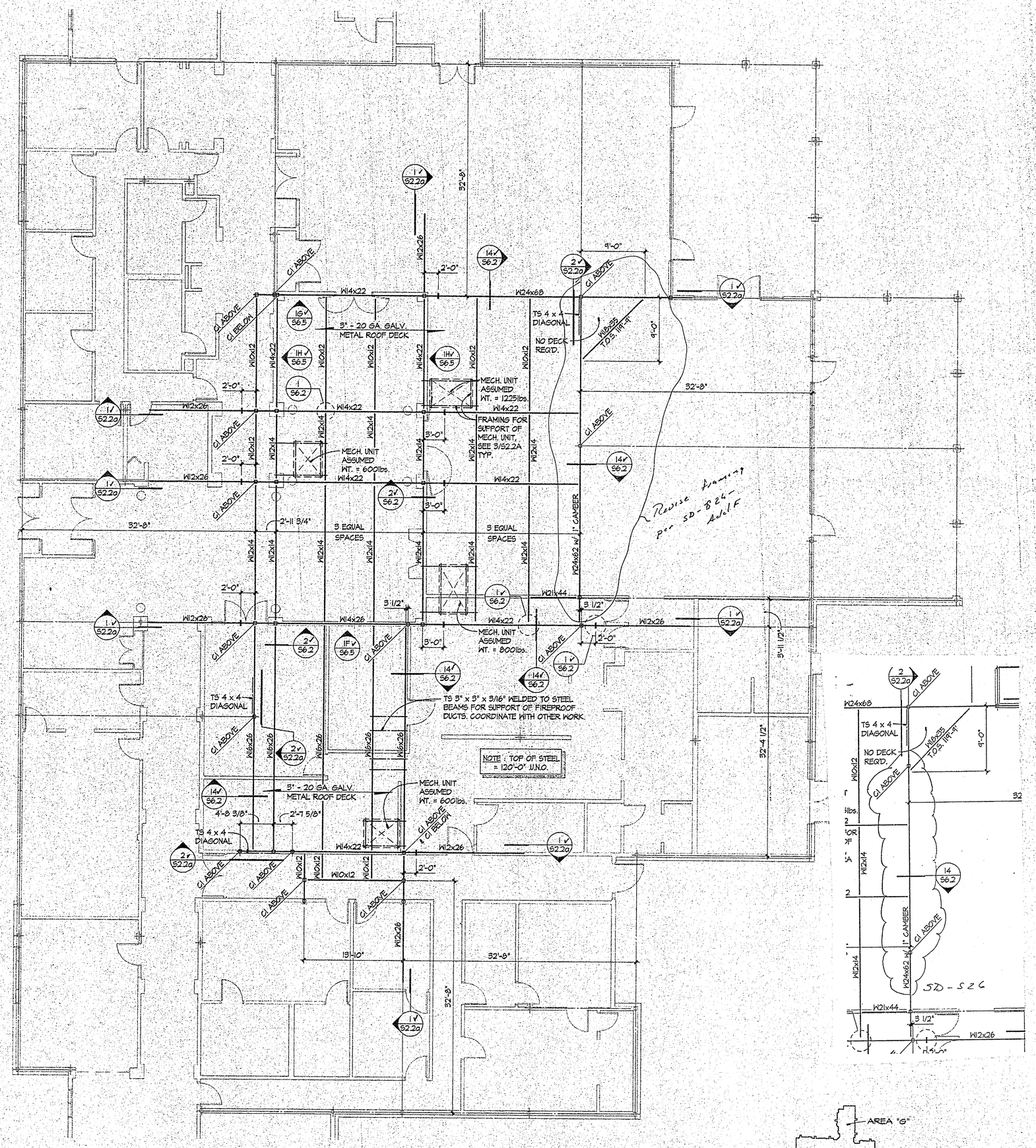

COMMONS FLAT ROOF FRAMING PLAN - AREA "A"

NORTH 1/8" = 1'-0"

NOTE : SEE STRUCTURAL NOTES ON SHEET S2.0

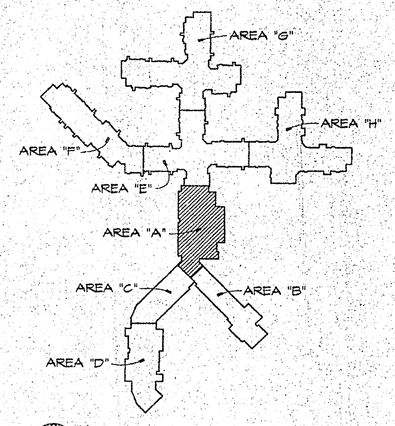

KEY PLAN

NORTH NO SCALE

These documents have been prepared for the CHRISTWOOD RETIREMENT CENTER project. They are not suitable for use on other projects or other sites without the express written approval and participation of RDG Schutte Wilscam Birge Inc.
Reproduction is prohibited.
© RDG Schutte Wilscam Birge

STATE OF LOUISIANA
NELSON T. WYMANS
REG. No. 19465
REGISTERED PROFESSIONAL ENGINEER
CIVIL ENGINEERING

THOMPSON, CRUEGGEN & DORNER, INC.
STRUCTURAL ENGINEERS

RDG Schutte Wilscam Birge
8805 Indian Hills Drive Suite 100 Omaha, Nebraska 68114 402-392-0133 FAX 402-392-0433
ARCHITECTURE INTERIOR DESIGN PLANNING

CHRISTWOOD
A CONTINUING CARE RETIREMENT FACILITY
COVINGTON LOUISIANA

DATE: 25NOVEMBER1994
PROJECT #: 9204100
FILE: 215

S2.2a

RENAISSANCE DESIGN GROUP • RENAISSANCE DESIGN GROUP • RENAISSANCE DESIGN GROUP • RENAISSANCE DESIGN GROUP • RENAISSANCE DESIGN GROUP • RENAISSANCE DESIGN GROUP • RENAISSANCE DESIGN GROUP • RENAISSANCE DESIGN GROUP