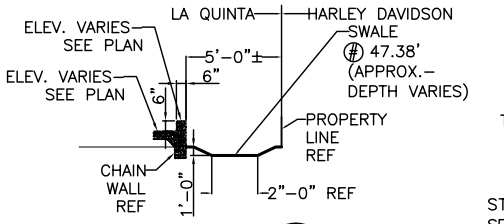

SECTION
N.T.S.

G C3 C3

DRILL 8" HOLE IN 15" PVC CAP SOLVENT WELD TO DRAIN PIPE

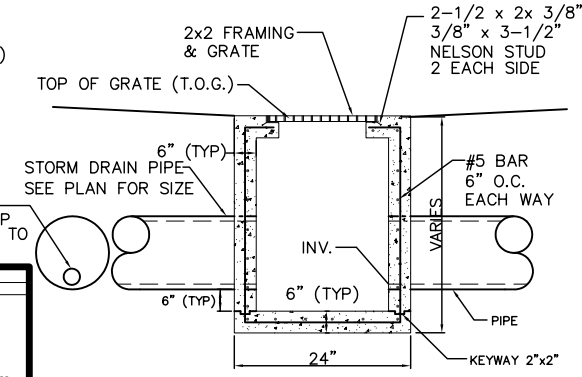

TYPICAL DROP INLET
N. T. S.

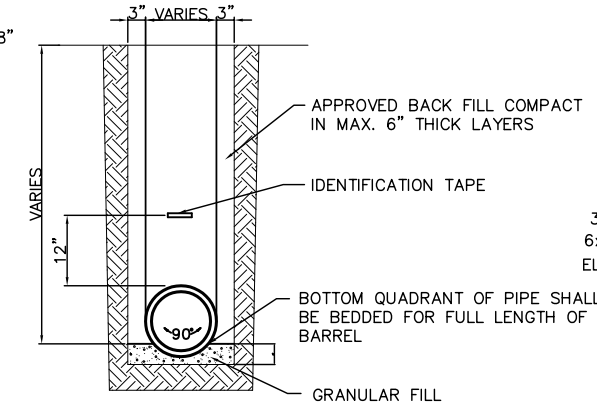

DRAIN PIPE BEDDING
N. T. S.

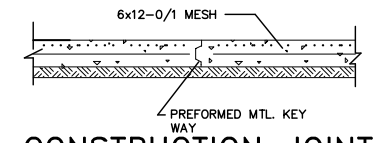

CONSTRUCTION JOINT
N. T. S.

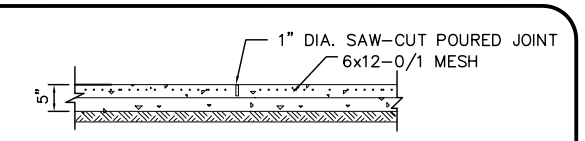

CONTRACTION JOINT
N. T. S.

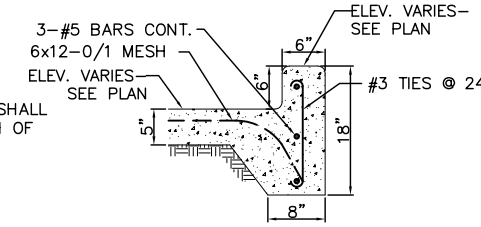

TYPICAL CURB DETAIL
SCALE: 1" = 1'-0"

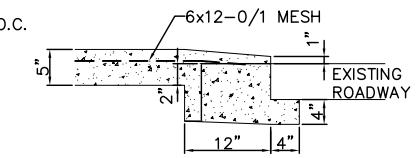

SECTION
SCALE: 1" = 1'-0"

PROJECT:	La Quinta Biloxi

DRAINAGE RUN OFF CALCULATIONS – RATIONAL METHOD

PRIOR DEVELOPMENT
10 Year Frequency

Q_1 = CIA

Watertight Surfaces	c(1) = 0.9	0	sqft =	0.000	Acres
Gravel Surface	c(2) = 0.21	0	sqft =	0.000	Acres
Green Space	c(3) = 0.35	125851	sqft =	2.889	Acres
Summary	c = 0.35	125851	sqft =	2.889	Acres

Duration (D) = Time of concentration (TC)
TC = .7039(L^.3917)(c^-1.1308)(S^-.1985)

where	L = 615	Runoff length ft	Elev diff = 2
	c = 0.35	Runoff coef	
	S = 0.3252	Percent Slope	
therefore	TC = D = 35.70	minutes or	
and from Rainfall Intensity Table	I = 4.50	in/hr	
	Q_1 = 4.550 cfs	RUNOFF LIMIT 90%	4.095 cfs

POST DEVELOPMENT
10 Year Frequency

Q_2 = CIA

Watertight Surfaces	c(1) = 0.9	91027	sqft =	2.090	Acres
Gravel Surface	c(2) = 0.21	0	sqft =	0.000	Acres
Green Space	c(3) = 0.35	34824	sqft =	0.799	
Summary	c = 0.75	125851	sqft =	2.889	Acres

D = Time of concentration (TC)
TC = .7039(L^.3917)(c^-1.1308)(S^-.1985)

where	L = 476	Runoff length ft	Elev diff = 0.25
	c = 0.75	Runoff coef	
	S = 0.0525	Percent Slope	
therefore	TC = D = 19.85	minutes or	
and from Rainfall Intensity Table	I = 7.60	in/hr	
	Q_2 = 16.420 cfs		

RESULTS

DETENTION REQUIRED	Q_2-Q_1	12.325 cfs	
ONE HOUR DETENTION		44368.8 cuft	
DETENTION DIMENSIONS	WIDTH	197 feet	
	LENGTH	358 feet	
	DEPTH	0.63 feet	

DISCHARGE END AREA CALCULATIONS

Q = cA(2gH)^1/2 where Q is allowable run off

Allowable run off	Q =	4.095	cfs
Friction loss factor	c =	0.98	coefficient
Acceleration	g =	32.2	ft/ft/sec
Height above invert	H =	2.75	feet
End area	A =	0.31	sqft
REQUIRED CONDUIT =		7.59	inch diameter

**NOTE: THIS CHART REFLECTS DRAINAGE CALCULATIONS FOR LOTS 2A AND 3A.

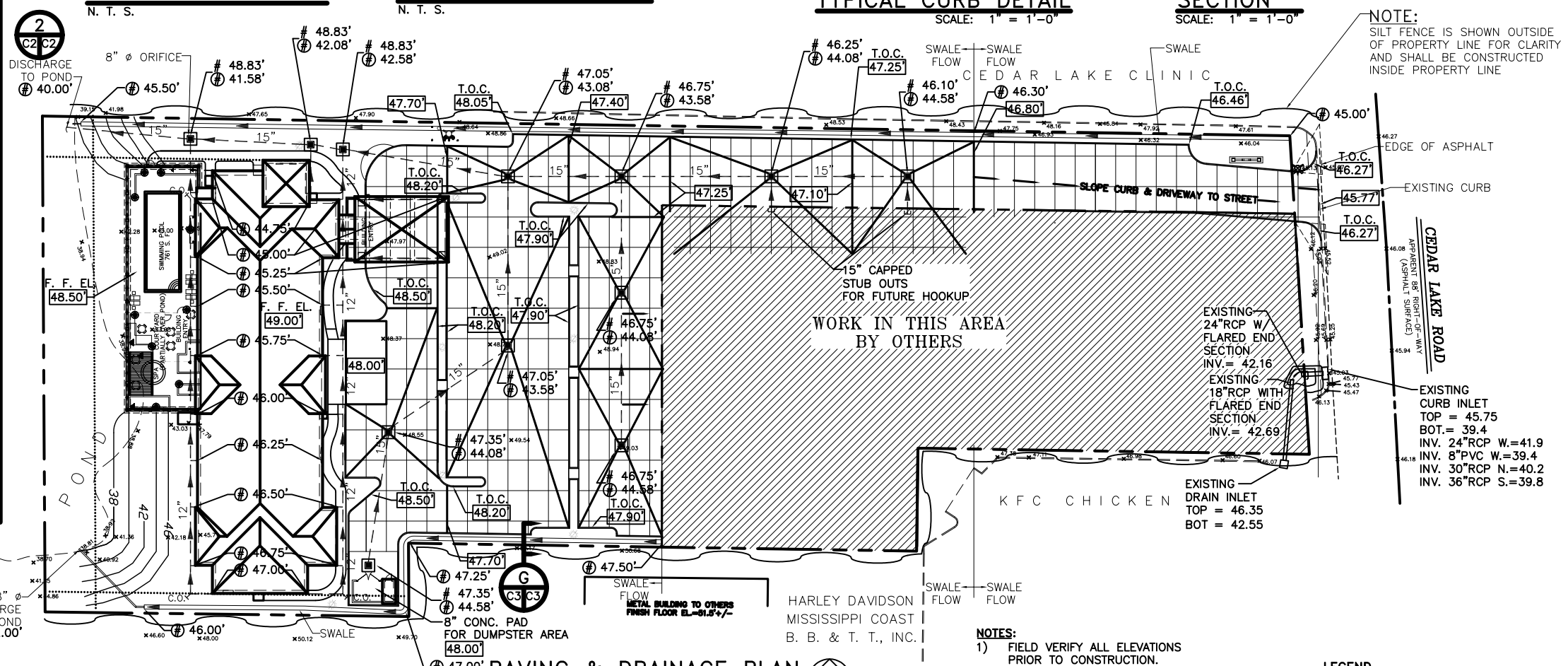

PAVING & DRAINAGE PLAN
SCALE: 1"=30'-0"

NOTE:
SILT FENCE IS SHOWN OUTSIDE OF PROPERTY LINE FOR CLARITY AND SHALL BE CONSTRUCTED INSIDE PROPERTY LINE

NOTES:
1) FIELD VERIFY ALL ELEVATIONS PRIOR TO CONSTRUCTION.
2) DRAIN PIPE & FITTINGS SHALL BE POLYVINYL CHLORIDE PLASTIC PIPE MEETING CLASS A-2000 PVC.
3) ELEVATIONS SHOWN ARE M.S.L.
4) MUCH OUT 24" DEEP FOR FOUNDATION PAD MINIMUM, OR TO UNDISTURBED SOIL CAPABLE OF 1500 PSF BEARING.

LEGEND

- PROPERTY LINE
- SETBACK LINE
- NEW BUILDING
- EXISTING CURB
- NEW CURB
- CONTROL JOINT
- SLOPE LINE
- 12" DRAIN LINE
- SHEET PILE BULKHEAD WITH CAP
- HANDICAPPED PARKING
- CATCH BASIN W/ TEMPORARY INLET PROTECTION
- EXISTING ELEVATIONS
- TOP OF GRATE
- INVERT ELEVATION
- NEW ELEVATION
- DIRECTIONAL FLOW

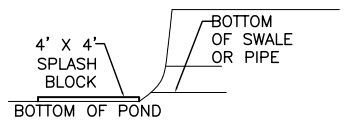

DETAIL 2
N.T.S.
C2 C2

SIDEWALKS

1. ALL SIDEWALKS SHALL BE CONSTRUCTED OF PORTLAND CEMENT CONCRETE WITH A COMPRESSIVE STRENGTH OF 2,500 P.S.I. IN TWENTY-EIGHT DAYS AND A MIN. THICKNESS OF FIVE INCHES.
2. ALL SIDEWALKS TO HAVE A WIDTH OF FIVE FEET AND AND SHALL BE CONSTRUCTED AS PER THE LOCATIONS SHOWN ON THIS PLAN.
3. ALL SIDEWALKS SHALL BE SCORED TO A DEPTH OF 3/4" AT FOUR FOOT INTERVALS WITH EXPANSION JOINTS PLACED AT TWENTY FOOT INTERVALS.
4. EXPANSION JOINTS SHALL BE CONSTRUCTED OF 1/2" THICK PRE-MOLDED EXPANSION MATERIAL WITH ALL CORNERS TO BE FORMED BY EXPANSION JOINTS.
5. ANY SIDEWALK OR ACCESSIBLE ROUTE THAT IS NOT AT A LEVEL ELEVATION AT IT'S INTERSECTION WITH A DRIVEWAY OR STREET WILL BE REQUIRED TO INSTALL A CURB RAMP AT A MAX. SLOPE OF 1:12 WITH A MAX. RISE OF 30" AND A MIN. LEVEL STRAIGHT CURB SEGMENT OF 48".
6. THE TEXTURE OF THE DRIVEWAY AND INTERSECTION HANDICAP RAMPS SHALL BE CONSTRUCTED OF A NON-SLIP SURFACE. ACCOMPLISHED BY "BROOMING" THE RAMP SURFACE AND GROOVING ONE INCH SPACING AT RIGHT ANGLE DIRECTIONS. GROOVES TO BE APPROXIMATELY 1/4" x 1/8" INCH WIDE.
7. SIDEWALK SHALL BE SLOPED 1" TOWARDS THE STREET.
8. CONTRACTOR SHALL CONTACT THE DEPARTMENT OF ENGINEERING PRIOR TO ANY WORK DONE WITHIN THE COUNTY OR CITY RIGHT OF WAY OR SERVITUDE.

PARKING LOT

1. ALL DRIVEWAYS BETWEEN STREET AND PROPERTY LINE SHALL BE CONSTRUCTED OF PORTLAND CEMENT CONCRETE WITH A COMPRESSIVE STRENGTH OF 4,000 P.S.I. IN TWENTY-EIGHT DAYS AND A MIN. THICKNESS OF SIX INCHES.
2. ALL DRIVEWAYS BETWEEN STREET AND PROPERTY LINE CONNECTING WITH AN EXISTING ROADWAY TO BE CONSTRUCTED IN ACCORDANCE WITH DETAIL AS SHOWN ON THIS PLAN.
3. EXACT LOCATIONS OF ROADWAY AND DRIVEWAY CURBING WILL BE DETERMINED IN THE FIELD BY A REPERSENTATIVE OF THE DEPARTMENT OF ENGINEERING.
4. CONTRACTOR SHALL CONTACT THE DEPARTMENT OF ENGINEERING PRIOR TO THE FORMING OF THE DRIVEWAYS CONNECTING TO THE ROADWAY.

DRIVEWAYS

5. PARKING STALLS MUST BE STRIPED WITH A FOUR INCH CONTRASTING STRIPE (YELLOW ON CONCRETE AND YELLOW OR WHITE ON ASPHALT PARKING LOT).
6. HANDICAP PARKING SPACE TO BE DESIGNATED BY BLUE STRIPING & EITHER A BLUE SYMBOL ON A WHITE BACKGROUND OR A WHITE SYMBOL ON A BLUE BACKGROUND. HANDICAP PARKING STALL REQUIRES THE INSTALLATION OF THE PROPER SIGNAGE.
7. ALL WHEEL STOPS AND CONCRETE CURBS SHALL BE CONSTRUCTED IN ACCORDANCE WITH THE DETAIL SHOWN ON THIS PLAN.
8. ALL PARKING SPACES TO BE LAID OUT AS SHOWN ON THIS PLAN UNLESS OTHERWISE INDICATED.

DRAINAGE

1. CONCRETE STRENGTH TO BE 4,000 P.S.I. (MIN.) @ 28 DAYS.
2. WHEN BOX IS 7'-0" OR LESS IN HEIGHT USE ONE LAYER OF BRICK. WHEN BOX IS 7'-0" BUT LESS THAN 12'-0" USE TWO LAYERS OF BRICK.
3. ALL MASONRY TO BE LAID WITH RUNNING BOND AND HEADER COURSE (EVERY FOURTH LAYER).
4. ALL WALLS TO BE PLASTERED 1/2" THICK INSIDE AND OUTSIDE.
5. 12" THICK LIMESTONE BEDDING FOUNDATION SHALL BE REQUIRED UNDER ALL MANHOLES AND BASINS.
6. WHEN THE DEPTH OF BOX OR MANHOLE IS FOUR FOOT OR GREATER THE INSTALLATION OF STEPS WILL BE REQUIRED IN ACCORDANCE WITH PUBLIC WORKS STANDARDS.
7. THE MIN. DRAIN SIZE ACCEPTABLE FOR ANY INSTALLATION ON PUBLIC RIGHT-OF-WAY SHALL BE 24" INCHES IN DIAMETER.
8. CONTRACTOR WILL CONTACT THE DEPARTMANT OF ENGINEERING PRIOR TO ANY WORK DONE WITHIN THE COUNTY OR CITY RIGHT OF WAY OR SERVITUDE.
9. DRAINAGE FROM LOT 3A ENTERS THE DRAIN SYSTEM IN LOT 2A VIA CATCH BASINS LOCATED IN THE EAST WEST CROSS ACCESS AREA.

TRAFFIC CONTROLS

ANY WORK IN THE ROADWAY OR ADJACENT TO THE ROADWAY CAUSING AN INTERFERENCE TO VEHICULAR TRAFFIC REQUIRES PRIOR NOTIFICATION TO THE COUNTY OR CITY TRAFFIC ENGINEERING DIVISION AND COMFORMITY TO THE REQUIREMENTS OF THE UNIFORM MANUAL ON TRAFFIC CONTROL DEVICES OF THE STATE OF MISSISSIPPI. THE CONTRACTOR MUST FURNISH ALL NECESSARY TRAFFIC SIGNS AND/ OR BARRICADES AND MAINTAIN THEM DURING CONSTRUCTION ACTIVITY.

PAVING & DRAINAGE PLAN

DR. EDUARDO HERNANDEZ
CEDAR LAKE ROAD
BILOXI, MISSISSIPPI

LA QUINTA INN & SUITES

DAMMON ENGINEERING. INC.
1095 FLORIDA AVENUE 985-649-5832 SLIDELL, LA. 70458
DAMMONENGINEERING.COM

SCALE:AS NOTED
FILE:
JOB NO. 1694
DATE:11-01-05
SHEET
C-3
OF

DESIGN 3 REVISED: 10-05-06
DESIGN 3 REVISED: 09-22-06