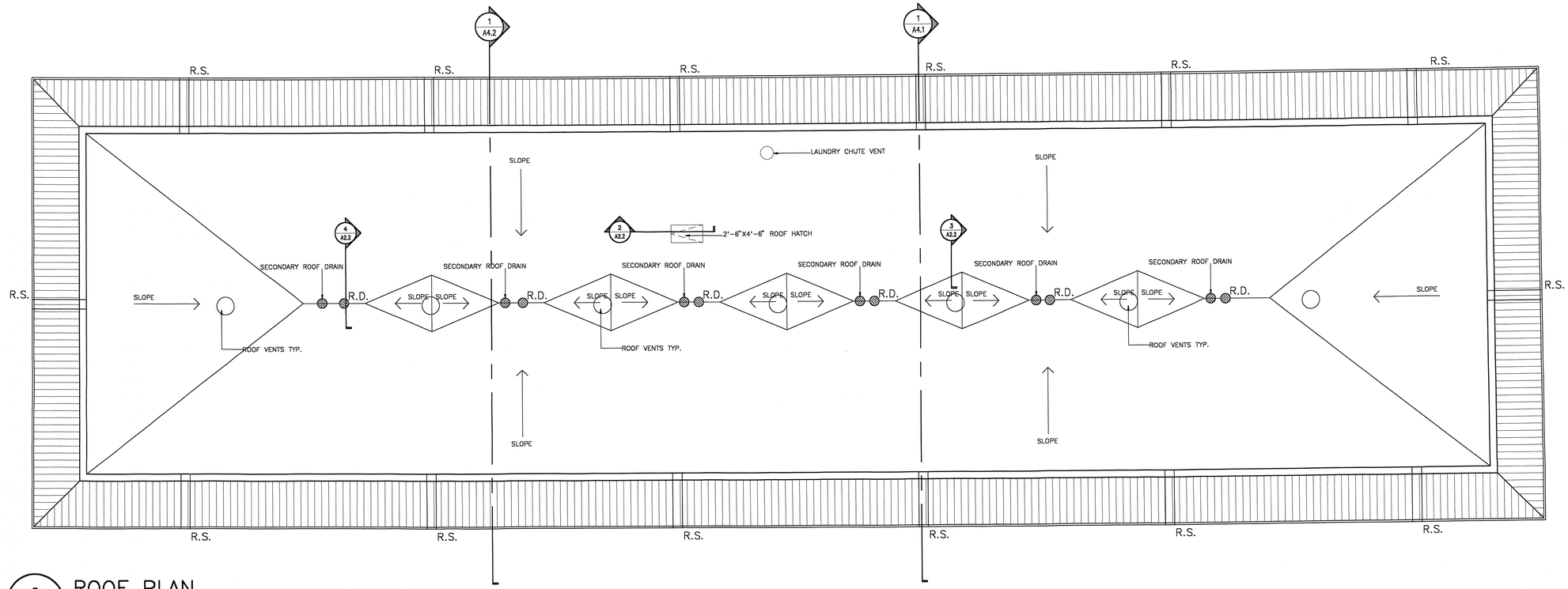

1 ROOF PLAN

SCALE:1/8"=1'-0"

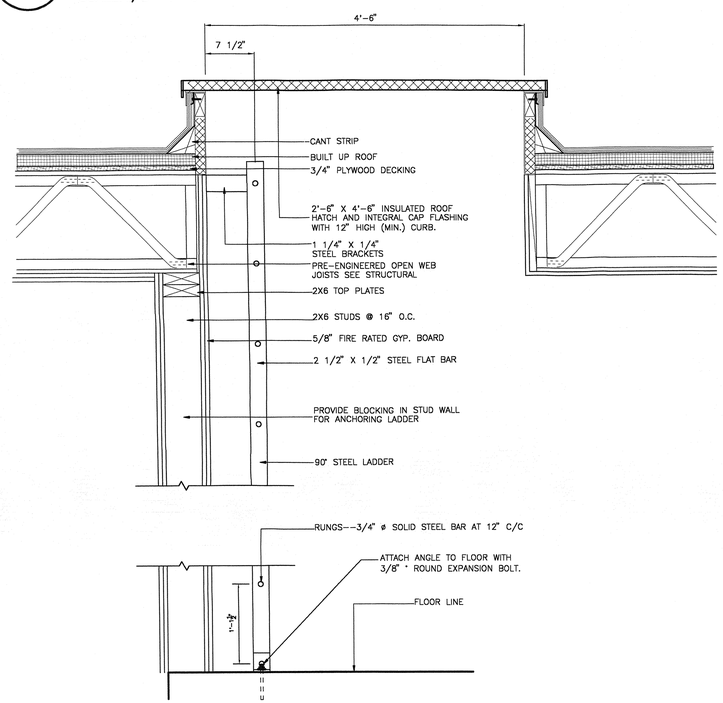

2 SECTION AT ROOF HATCH

SCALE:1"=1'-0"

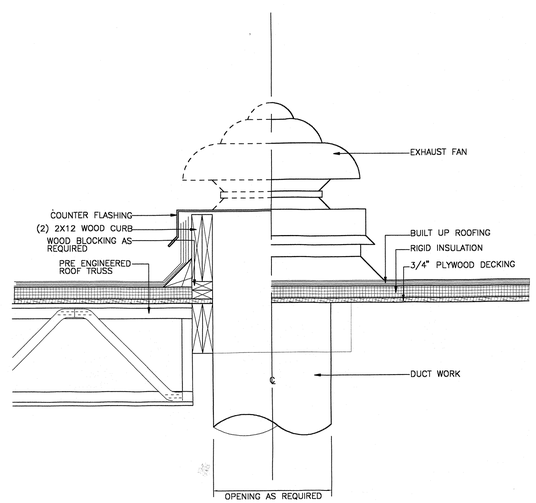

3 SECTION AT AIR EXHAUST

SCALE:1"=1'-0"

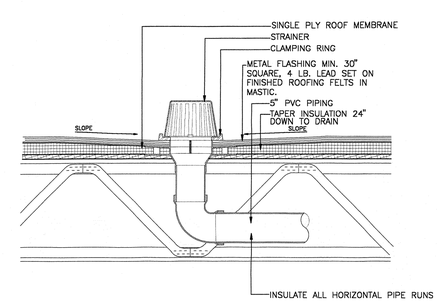

4 SECTION AT ROOF DRAIN TYP.

SCALE:1"=1'-0"

ROY HENDRICK AIA ARCHITECT
5647 GALERIA DRIVE, SUITE H
BATON ROUGE, LOUISIANA 70816
(225)-293-6363

Hampton Inn®
SIX G'S SUBDIVISION
COVINGTON, LOUISIANA

REVISIONS
05-14-01

DATE
11-01-00

DRAWN BY

SHEET
A2.2