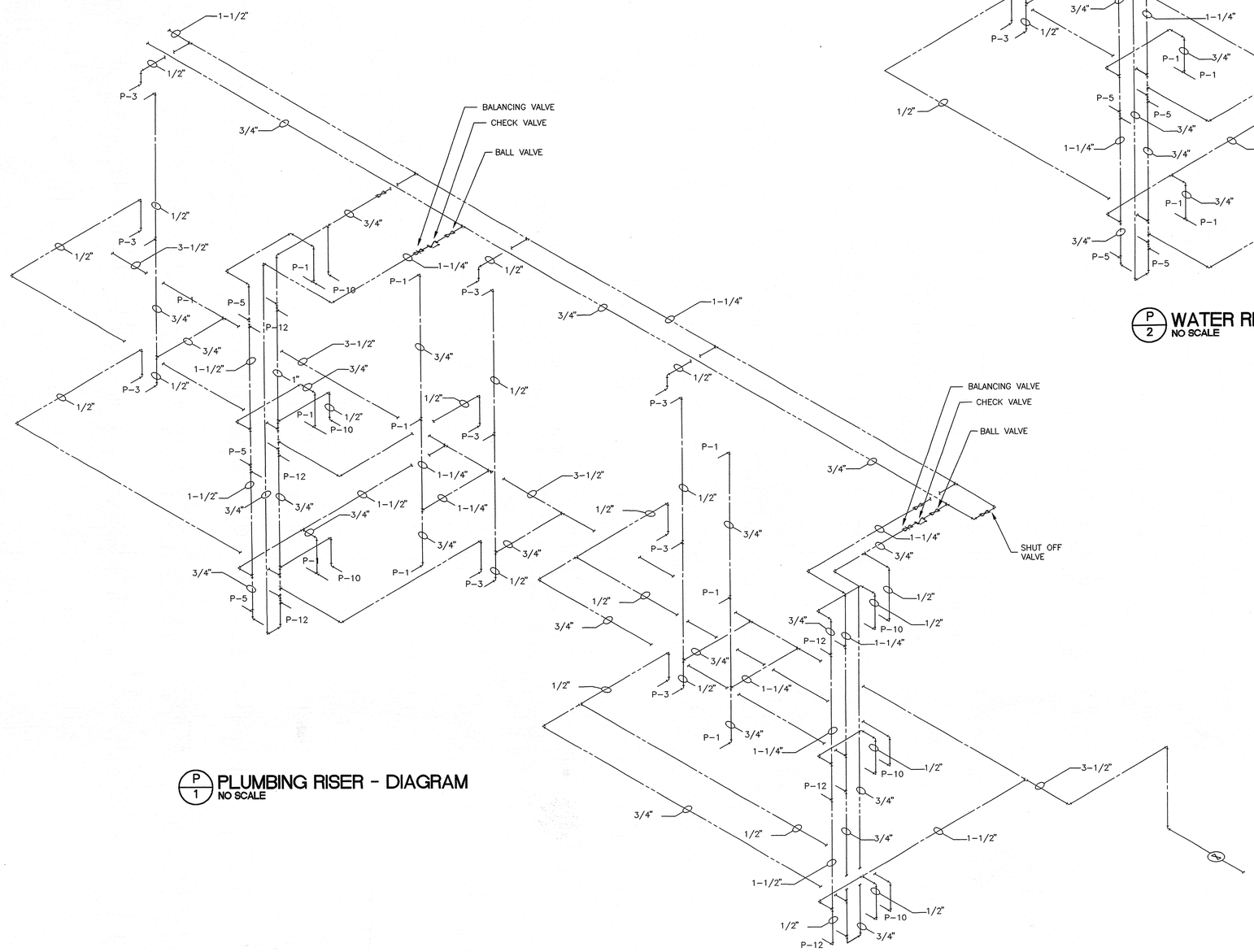

P/1 PLUMBING RISER - DIAGRAM
NO SCALE

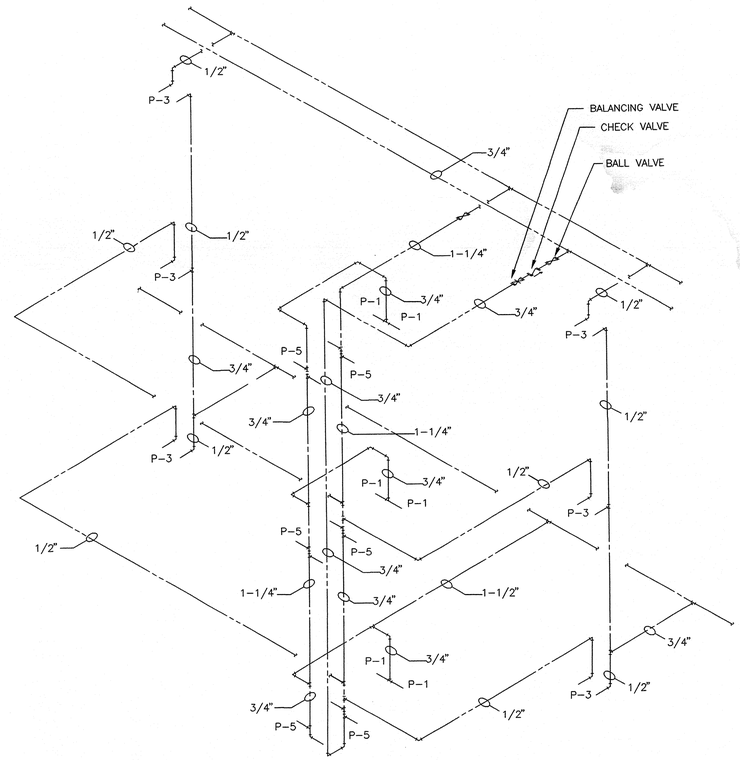

P/2 WATER RISER - DIAGRAM
NO SCALE

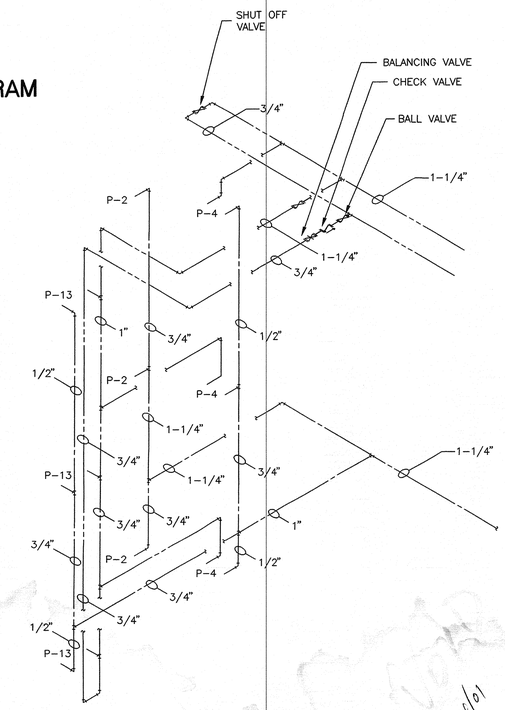

P/11 WATER RISER - DIAGRAM
NO SCALE

6/14/01

ROY HENDRICK AIA ARCHITECT
5647 GALERIA DRIVE, SUITE H
BATON ROUGE, LOUISIANA 70816
(504)-293-6363

STATE OF LOUISIANA
HENRY B. [illegible]
REG. NO. [illegible]
PROFESSIONAL ENGINEER

Hampton Inn
SIX G'S SUBDIVISION
COVINGTON, LOUISIANA

REVISIONS
5-14-01

DATE
8-23-00

DRAWN BY

SHEET
P-6