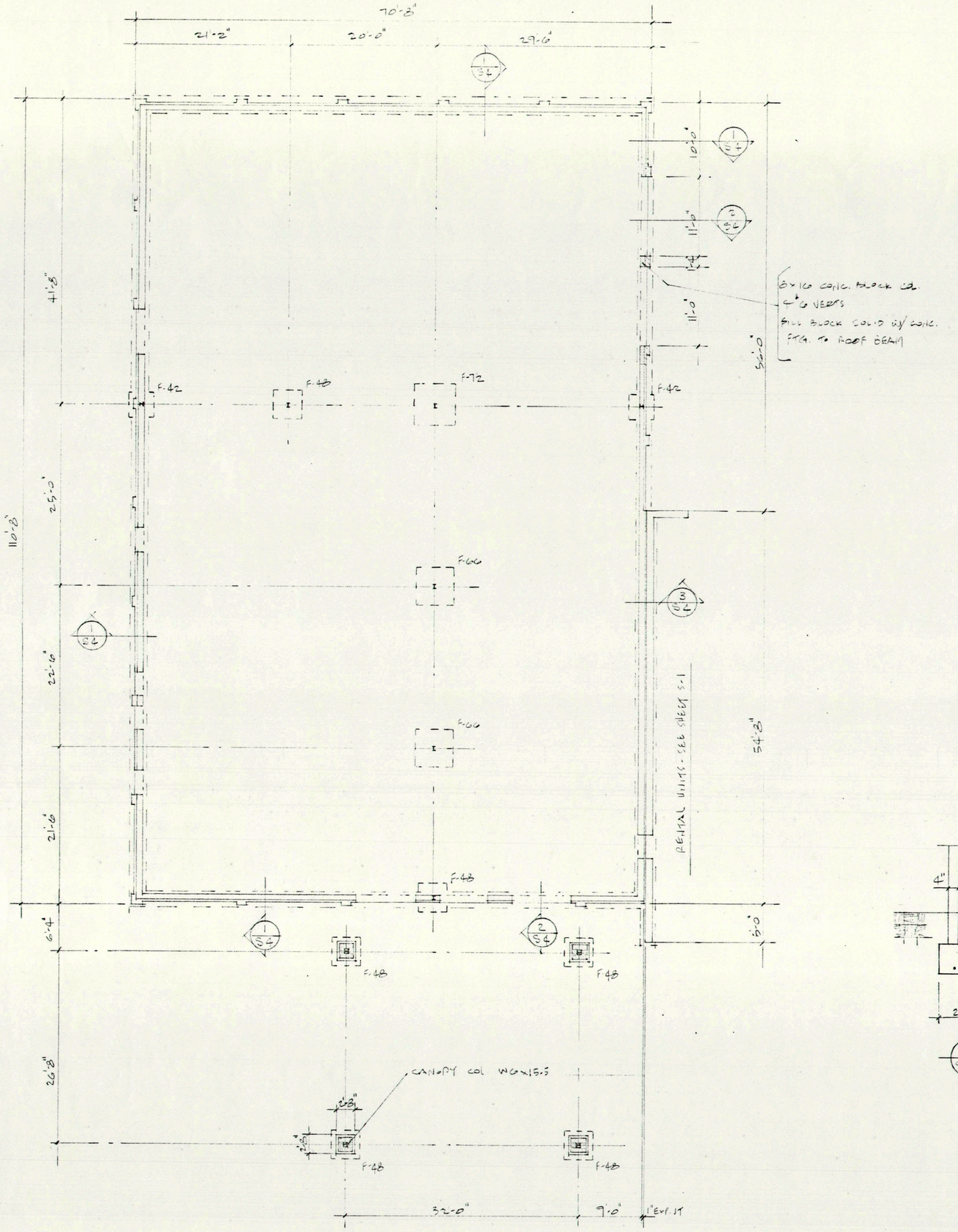

COMMERCIAL BUILDING FOUNDATION & GROUND FLOOR PLAN

1/8"=1'-0"

COLUMN FOOTING SCHEDULE		
MARK	SIZE	REINFORCING ½ E.W.
F-42	3'-6"x3'-6"x12"	6#4 x 3'-0"
F-48	4'-0"x4'-0"x12"	6#5 x 3'-6
F-66	5'-6"x5'-6"x12"	12#6 x 5'-0"
F-72	6'-0"x6'-0"x12"	10#7 x 5'-6"

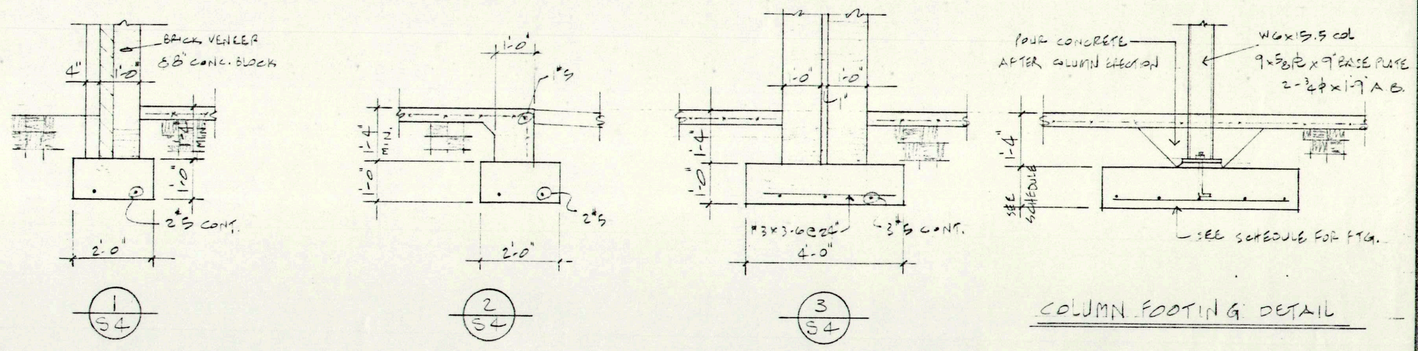

1 S4 2 S4 3 S4

COLUMN FOOTING DETAIL

DRAWN	DESCRIPTION	CHECK

A MOTEL
FOR
SLIDELL, LOUISIANA

THESE PLANS ARE THE PROPERTY OF THE ARCHITECT. THEY SHALL ONLY BE USED FOR THE CONSTRUCTION OF THE BUILDING SO DESIGNATED IN THE TITLE BLOCK. NO CHANGES ABSOLUTELY NONE, WILL BE MADE WITHOUT THE APPROVAL OF THE ARCHITECT, AND UPON COMPLETION OF THE JOB, ALL PLANS AND SPECIFICATIONS SHALL BE RETURNED TO THE ARCHITECT.

ARCHEON
ARCHITECTS · ENGINEERS
2930 AIRWAYS • MEMPHIS, TENNESSEE 38116

COMM. NO. 75274
DATE
SHEET NO. S-4