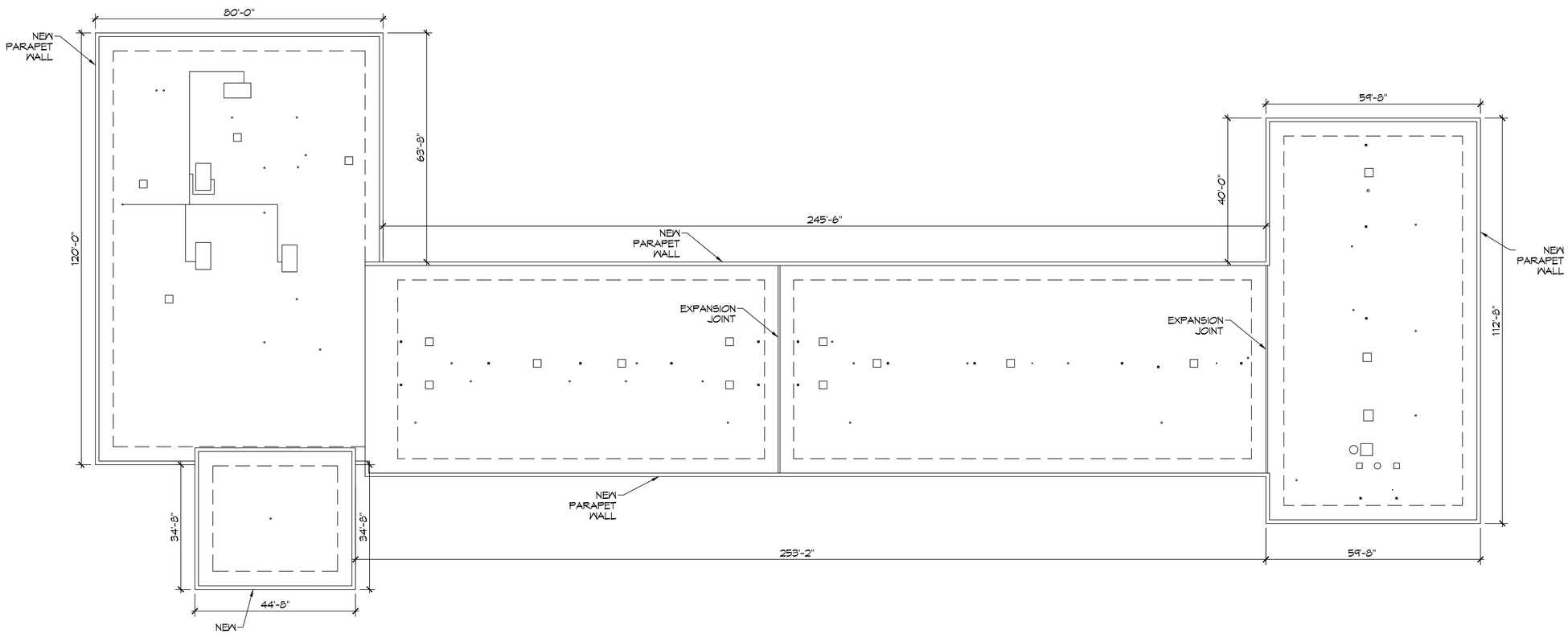

1 OVERALL ROOF PLAN
SCALE: 1/16"= 1'-0"

DAMMON ENGINEERING, INC.
LOUISIANA & MISSISSIPPI

Chief Engineer: Brian Mistich, PE
Staff Engineer: Trent Smith
Sidell, LA 70458

www.dammonengineering.com
info@dammonengineering.com
PH: 985.649.5832

#	DESCRIPTION	DATE

REVISIONS

SEAL:

NEW ROOF PLAN
RED ROOF INN
1662 GAUSE BLVD.
SLIDELL, LA 70458

JOB No:	2451
DATE:	04-12-2023
DRAWN BY:	CKD
CHECKED BY:	JMS

These drawings are the property of Dammon Engineering and shall not be reproduced or used for other projects without written consent of Dammon Engineering. Visual contact with these drawings shall constitute prima facie evidence of the acceptance of these restrictions.

SHEET TITLE:
ROOF PLAN

DRAWING NUMBER:
A101

SHEET No: 1 of 1

FILE NAME: J:\- Projects-Active\2451 - Red Roof Inn Slidell\Drawings\Current Drawings\A101 - Floor Plan.dwg PLOT DATE & TIME: Thursday, September 14, 2023 3:41:28 PM

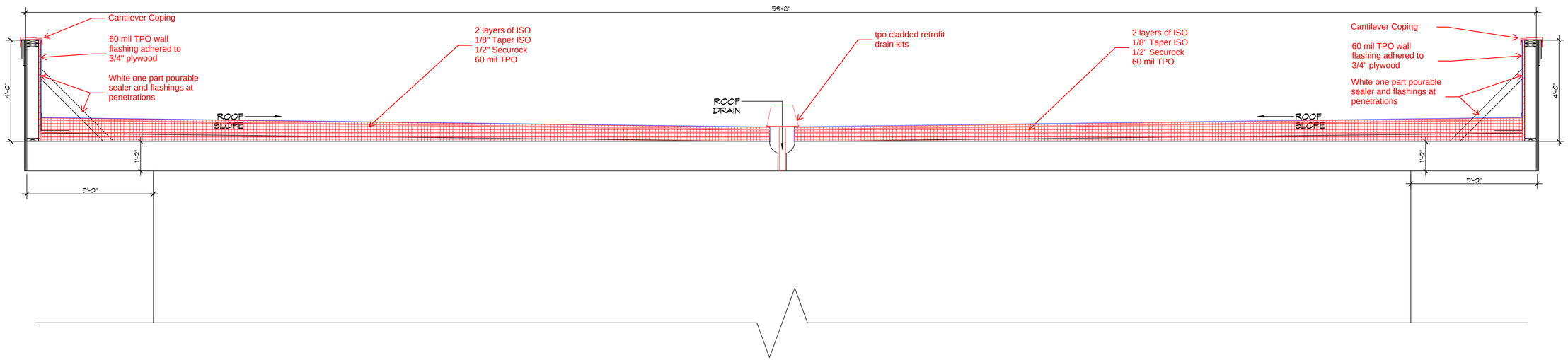

2 ROOF SECTION
SCALE: 1/2"= 1'-0"

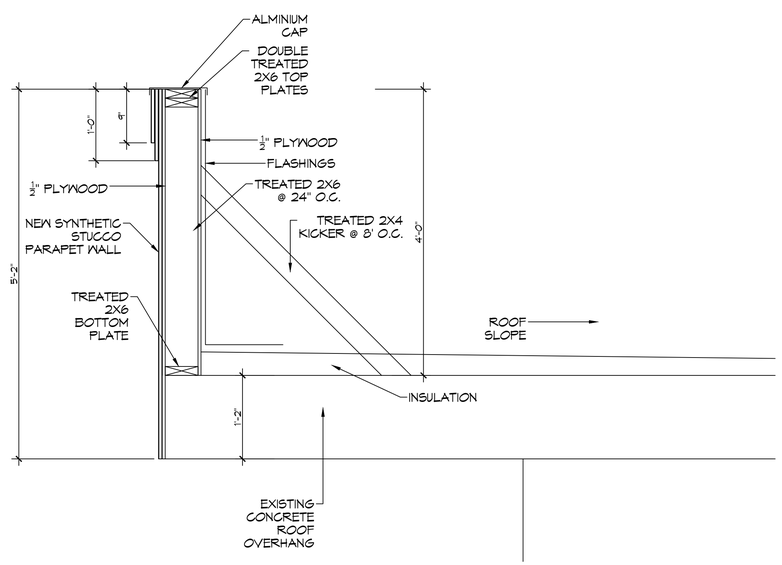

3 ROOF SECTION
SCALE: 1"= 1'-0"

DAMMON ENGINEERING, INC.
LOUISIANA & MISSISSIPPI
www.dammonengineering.com
info@dammonengineering.com
PH: 985.649.5832
Chief Engineer: Brian Mistich, PE
5544 Crystal Springs Trail
Slidell, LA 70458

REVISIONS

#	DESCRIPTION	DATE

SEAL:

NEW ROOF PLAN

RED ROOF INN

1662 GAUSE BLVD.
SLIDELL, LA 70458

JOB No:	2481	DATE:	09-12-2023
DRAWN BY:	CAD	CHECKED BY:	JMS

the dotted clouds the property of Dammon Engineering, and shall not be reproduced or used for other projects without the written consent of Dammon Engineering. Visual contact with these drawings shall constitute prima facie evidence of the acceptance of these restrictions.

SHEET TITLE:
ROOF SECTION AND DETAIL

DRAWING NUMBER:
A102

SHEET No: 1 of 1

FILE NAME: J:\-Home-Mistich\2481 - Red Roof Inn Slidell\Drawings\Current Drawings\A102 - Elevation Plan Details.dwg PLOT DATE & TIME: Thursday, September 14, 2023 3:41:18 PM