GENERAL NOTES:

1. SHOWER SLAB, REF 11/ A405
2. DIMENSIONS ARE TO FACE OF STUDS, UNO
3. REFER TO SHOWER BLOCKING ELEVATION FOR BLOCKING LOCATIONS

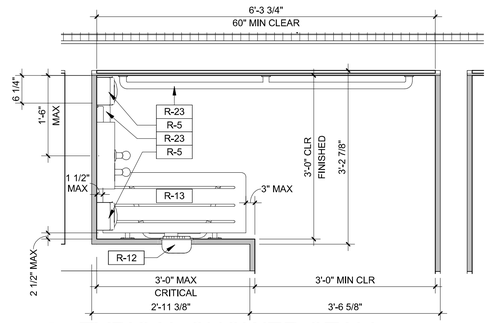

4 TYPICAL SHOWER STALL
3/4" = 1'-0"

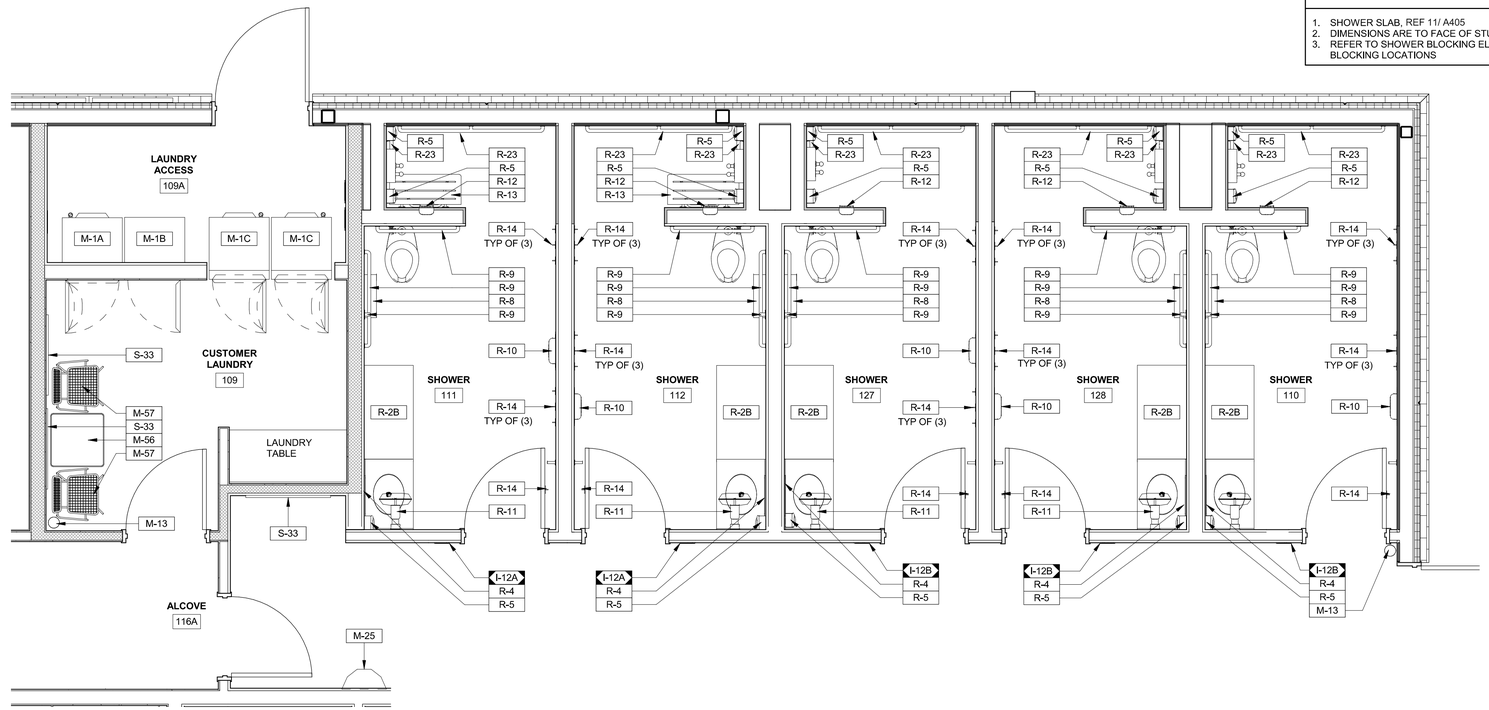

3 ENLARGED SHOWER AND LAUNDRY EQUIPMENT PLAN
3/8" = 1'-0"

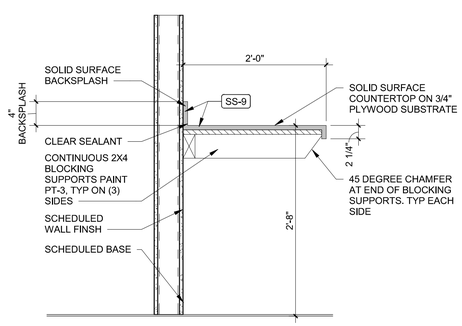

2 COUNTER SECTION

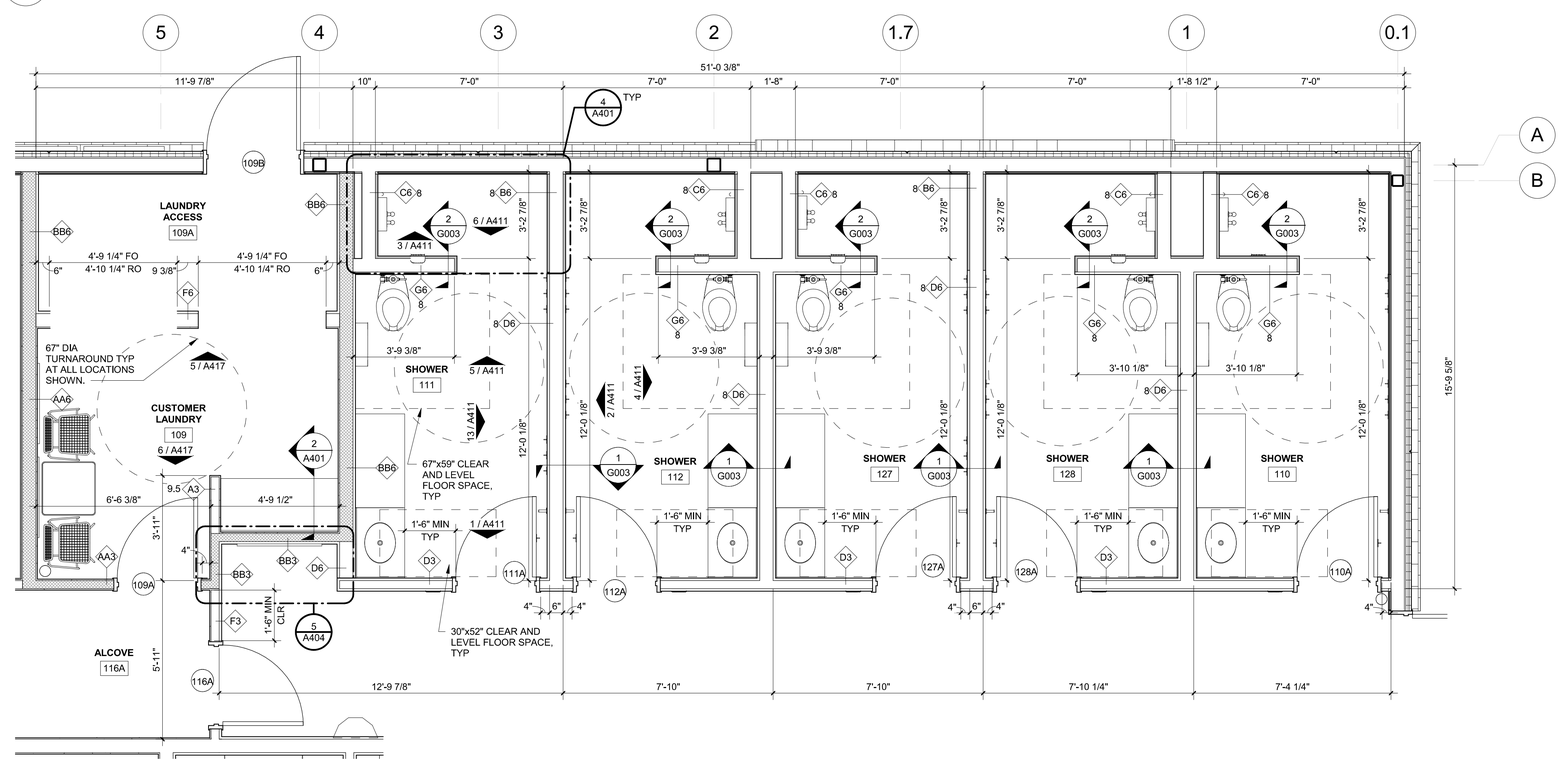

1 ENLARGED SHOWER AND LAUNDRY
3/8" = 1'-0"

HFA
HARRISON FRENCH & ASSOCIATES, PLLC
t 479.273.7780
1705 S. Walton Blvd., Suite 3
Bentonville, Arkansas 72712
www.hfa-ac.com

STIPULATION FOR REUSE
THIS DRAWING WAS PREPARED FOR LOVE'S TRAVEL STOPS IN NICHOLSON, MS
CONTRACT NUMBER: 0-0-0-0-0-X WITH ITS ISSUE DATE ON: 02/06/23 AND IT IS NOT INTENDED FOR USE ON ANOTHER PROJECT OR SITE OR AT A LATER TIME WITHOUT THE OWNER'S PRIOR CONSENT OR EXAMPLE ON ANOTHER PROJECT. THE ARCHITECT AND ENGINEERS, LICENSED ARCHITECTS AND ENGINEERS, REPRODUCTION OF THIS DRAWING FOR USE ON ANOTHER PROJECT IS NOT AUTHORIZED AND MAY BE CONTRARY TO THE LAW.

Love's
STORE NUMBER: 860
I-59, EXIT 1
NICHOLSON, MS 39466
JOB NUMBER: 03-23-30/09
T1-180

ISSUE BLOCK

CHECKED BY:	MAP
DRAWN BY:	ASE
DOCUMENT DATE:	02/06/23
PROTO:	T1-180
PROTO CYCLE:	Q4 - 2022

REGISTERED ARCHITECT
BOGUE L. EBBRECHT
4925
STATE OF ARKANSAS
Bogue Louis Ebbrecht
Digitally signed by Bogue Louis Ebbrecht
DN: cn=Bogue Louis Ebbrecht, o=Harrison French and Associates, L=Bentonville, S=ARKANSAS, C=US
Date: 2023.02.07 15:52:41-06'00'

SHOWERS PLANS

SHEET:
A401

2/6/2023 5:09:31 PM
C:\Users\mysya.preger\Documents\2021 Revit Projects\Loves_Nicholson_MS_ARC_T2_R0_v21_HFA.Mysya.Preger.rvt
3145-A401-SHOWERS PLANS