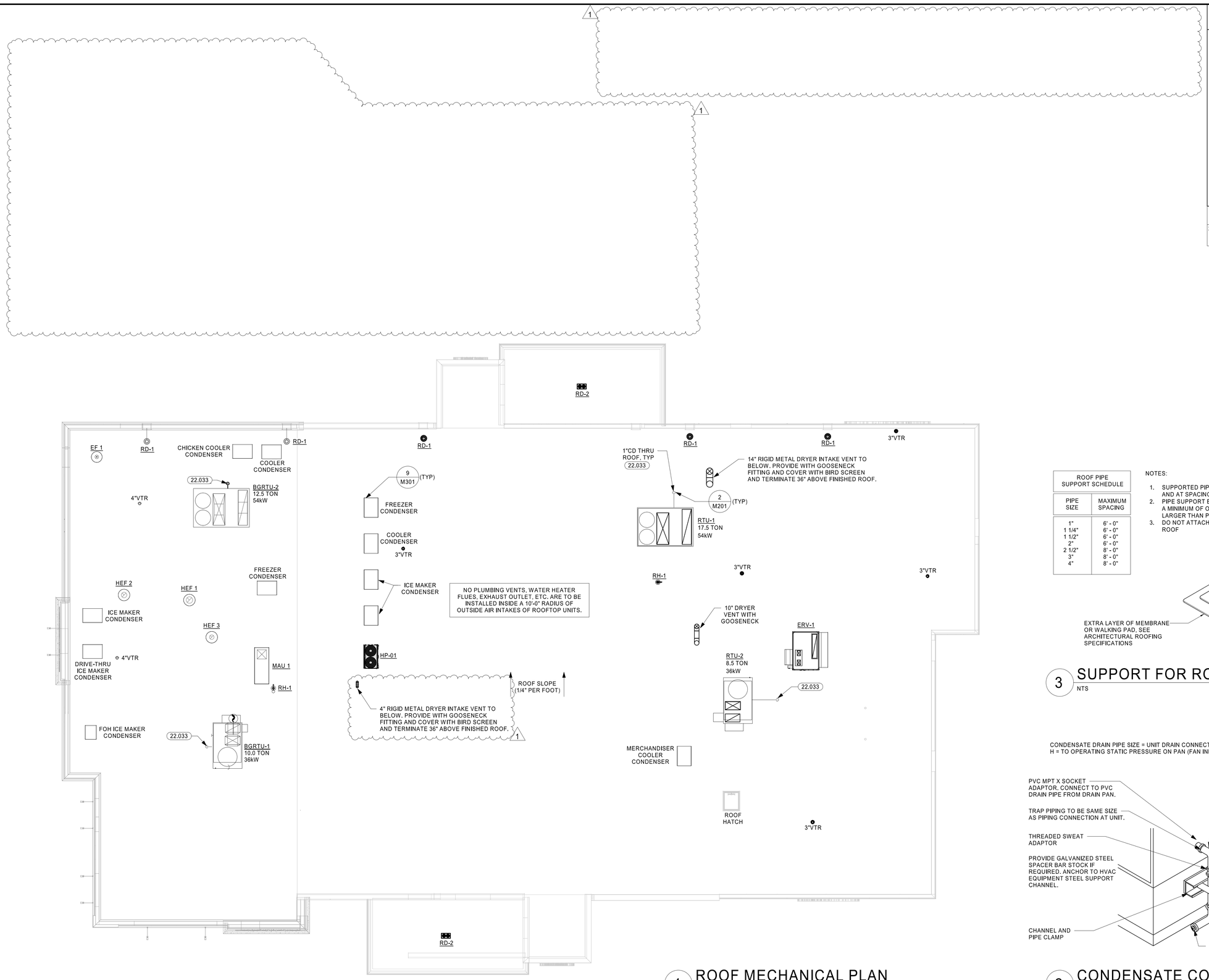

1 ROOF MECHANICAL PLAN
1/8" = 1'-0"

GENERAL NOTES

1. THE NATURAL GAS DEMAND SHOWN IN CUBIC FEET PER HOUR (CFH) IS BASED ON A HEATING VALUE OF 1000 BTU PER CUBIC FOOT AND SPECIFIC GRAVITY OF 0.6. CONTACT LOCAL UTILITY FOR EXACT LOCATION AND SIZE OF GAS METER, GAS PRESSURE, SIZE AND TYPE OF PIPING AND VALVES REQUIRED FOR CONNECTION TO METER. VERIFY CORRECT GAS PRESSURE DOWNSTREAM OF SERVICE REGULATOR AFTER GAS UTILITY COMPLETES INSTALLATION.
2. GAS PIPING SHALL BE SCHEDULE 40 BLACK STEEL PIPE WITH MALLEABLE IRON FITTINGS OR WELDED. VALVES AND OTHER EQUIPMENT SHALL HAVE SCREWED JOINTS OR WELDED.
3. TEST ALL LOW PRESSURE GAS PIPING FOR A PERIOD OF NOT LESS THAN TWO HOURS AT A PRESSURE OF NOT LESS THAN 60 PSIG, USING SOAP AND WATER OR SIMILAR MATERIALS AT ALL JOINTS WHEN LEAK TESTING. ALL EQUIPMENT MUST BE ISOLATED FROM THE GAS PIPING SYSTEM.

KEYNOTES

22.033	ROOF PIPE PORTAL FOR GAS OR CONDENSATE PIPE PENETRATION; RPS MODEL RC-2A, 12"X12"X11" WITH CAP MODEL N62.

ROOF PIPE SUPPORT SCHEDULE	
PIPE SIZE	MAXIMUM SPACING
1"	6' - 0"
1 1/4"	6' - 0"
1 1/2"	6' - 0"
2"	6' - 0"
2 1/2"	8' - 0"
3"	8' - 0"
4"	8' - 0"

NOTES:

1. SUPPORTED PIPE AT ALL ELBOWS AND AT SPACING SPECIFIED
2. PIPE SUPPORT BLOCK SHALL BE A MINIMUM OF ONE PIPE SIZE LARGER THAN PIPE
3. DO NOT ATTACH PIPESTANDS TO ROOF

MIRO INDUSTRIES, INC.
170 WEST COTTAGE AVE
SANDY, UTAH 84070
(801) 566-3680

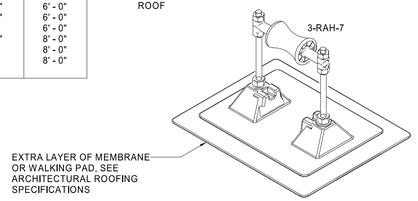

3 SUPPORT FOR ROOF MOUNTED PIPE
NTS

CONDENSATE DRAIN PIPE SIZE = UNIT DRAIN CONNECTION SIZE
H = TO OPERATING STATIC PRESSURE ON PAN (FAN INLET PRESSURE) + 1 IN.

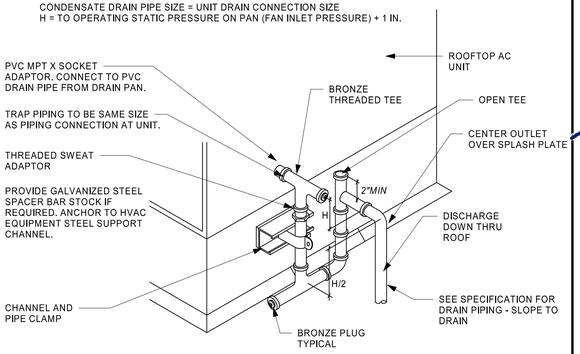

2 CONDENSATE CONNECTION AT RTU
NTS

HFA
HARRISON FRENCH & ASSOCIATES, LTD
t 479.273.7780
1705 S. Walton Blvd., Suite 3
Bentonville, Arkansas 72712
www.hfa-ae.com

STIPULATION FOR REUSE
THIS DRAWING WAS PREPARED FOR USE ON A SPECIFIC SITE AT NICHOLSON, MS. CONTEMPORANEOUSLY WITH ITS ISSUE DATE. THIS DRAWING IS NOT SUITABLE FOR USE ON A DIFFERENT SITE AT A LATER DATE. ANY REPEATED USE OF THIS DRAWING FOR REFERENCE PURPOSES OR AS THE BASIS OF DESIGN REQUIRED THE SERVICES OF PROPERLY QUALIFIED PROFESSIONALS. ANY OTHER REPRODUCTION OF THIS DRAWING FOR REUSE BY OTHERS IS PROHIBITED AND AUTHORIZED AND MAY BE CONTRARY TO LAW.

Love's
STORE NUMBER: 860
I-59, EXIT 1
NICHOLSON, MS 39466
JOB NUMBER: 03-23-30009
TIER 1 180

ISSUE BLOCK		
1	ADD 1	02/16/23

CHECKED BY:	JKR
DRAWN BY:	PRC
DOCUMENT DATE:	2/7/2023
PROTO:	TIER 1 180
PROTO CYCLE:	Q4 - 2022

GREG J. SCHLUTERMAN
LICENSED PROFESSIONAL ENGINEER
STATE OF MISSISSIPPI
2023.02.21 09:28:45-06'00'

ROOF MECHANICAL PLAN

SHEET:
M201

2/20/2023 4:05:41 PM
C:\Users\jkr\AppDataLocal\Temp\acpublish\Document\2021 Revit Projects\Loves_Nicholson_MS_MEP_T2_180_r21_HFA-Parker-Chenoweth.rvt
4210-M201-ROOF MECHANICAL PLAN CAD 1