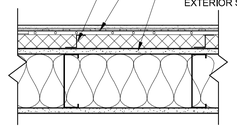

NICHIHA W/ RIGID INSULATION

6 PLAN NICHIHA INSTALLATION

1 1/2" = 1'-0"

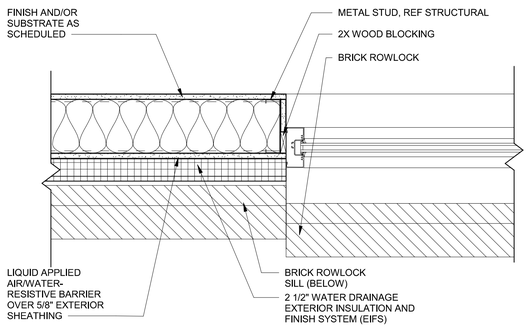

5 ENLARGED WALL DETAIL

1 1/2" = 1'-0"

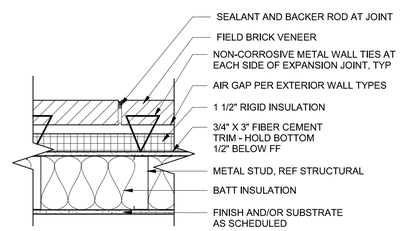

4 BRICK CONTROL JOINT

1 1/2" = 1'-0"

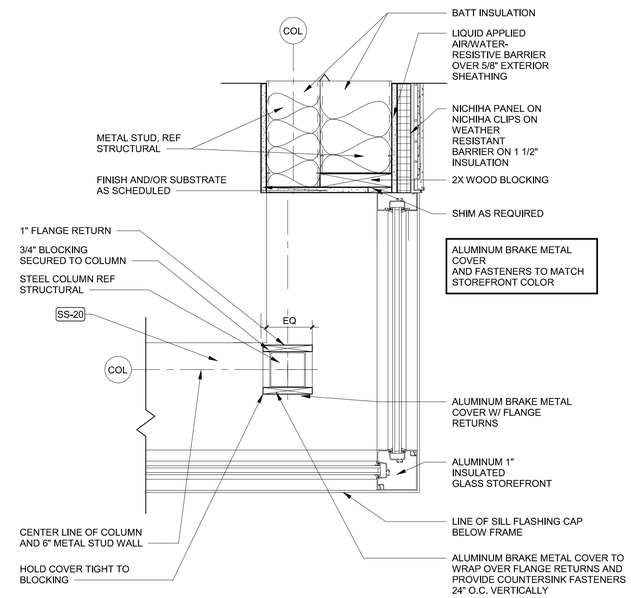

3 ENLARGED WALL DETAIL

1 1/2" = 1'-0"

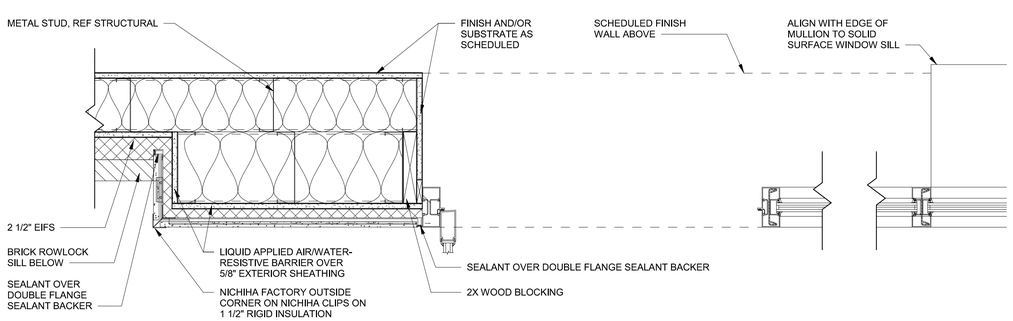

2 ENLARGED WALL DETAIL

1 1/2" = 1'-0"

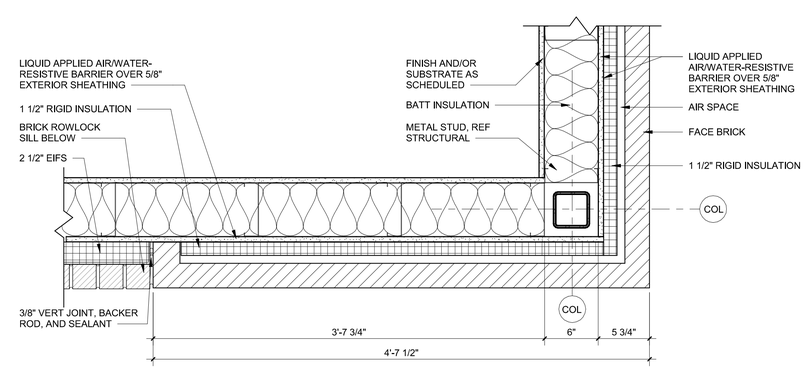

1 ENLARGED WALL DETAIL

1 1/2" = 1'-0"

HFA
HARRISON FRENCH & ASSOCIATES, PLLC
t 479.273.7780
1705 S. Walton Blvd., Suite 3
Bentonville, Arkansas 72712
www.hfa-ae.com

STIPULATION FOR REUSE
THIS DRAWING WAS PREPARED FOR LOVE'S COUNTRY STORES, NICHOLSON, MS
COPYRIGHT 2022 HFA
ISSUED FOR PERMIT ONLY WITH ITS ISSUE DATE ON 02/06/23, AND IT IS NOT INTENDED FOR CONSTRUCTION ON THE PROJECT SITE OR AT A LATER TIME. SUCH USE IS AT THE USER'S SOLE RISK OR EXAMPLE ON ANOTHER PROJECT WITHOUT THE WRITTEN CONSENT OF LICENSED ARCHITECTS AND ENGINEERS. REPRODUCTION OF THIS DRAWING FOR ANY PURPOSE OTHER THAN THAT AUTHORIZED AND MAY BE CONTRARY TO THE LAW.

Loves

STORE NUMBER: 860
I-59, EXIT 1
NICHOLSON, MS 39466
JOB NUMBER: 03-23-30009
BOJANGLES

ISSUE BLOCK

CHECKED BY:	MAP
DRAWN BY:	ASE
DOCUMENT DATE:	02/06/23
PROTO:	BOJANGLES
PROTO CYCLE:	Q4 - 2022

REGISTERED ARCHITECT
BOGUE L. EBBRECHT
4925
STATE OF MISSOURI
Bogue Louis Ebbrecht
Digitally signed by Bogue Louis Ebbrecht
DN: cn=Bogue Louis Ebbrecht, o=Harrison French & Associates, L=Bentonville, S=ARKANSAS, C=US
Date: 2023.02.07 15:56:10-06'00'

WALL SECTIONS AND DETAILS

SHEET:
BGA315

2/7/2023 1:08:57 PM
C:\Users\melyssa.prenger\Documents\2021 Revit Projects\Loves_Nicholson_MS_ARC_FT_BG_v21_HFA Melyssa Prenger.rvt
3005-BGA315-WALL SECTIONS AND DETAILS