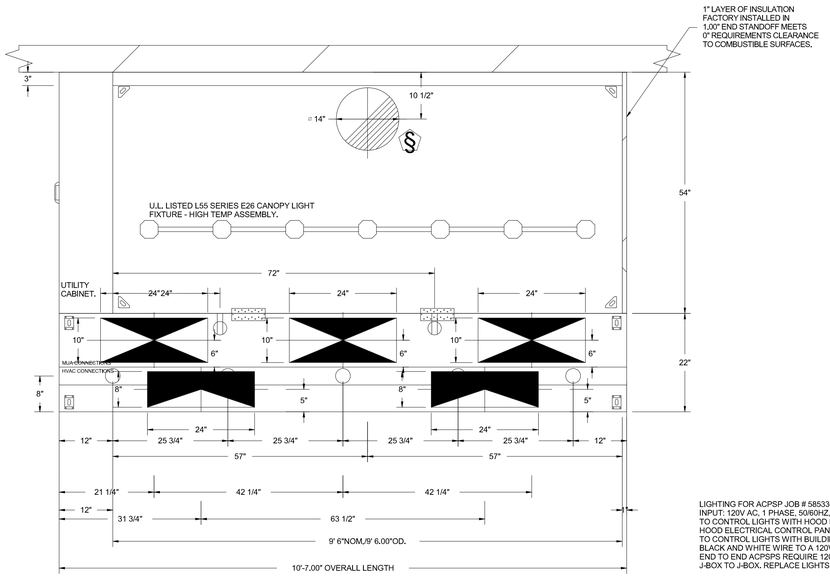

PLAN VIEW – HOOD #1 (GRILL 9' 6.00"OD)LONG
5424ND-2-ACPSP-F

ACPSP SHIPS LOOSE FOR FIELD INSTALLATION

LIGHTING FOR ACPSP JOB # 5853364 - HOOD #1
INPUT: 120V AC, 1 PHASE, 50/60HZ, 3.5 WATTS PER LIGHT.
TO CONTROL LIGHTS WITH HOOD LIGHT SWITCH, WIRE PER HOOD ELECTRICAL CONTROL PANEL SCHEMATIC.
TO CONTROL LIGHTS WITH BUILDING LIGHT SWITCH, WIRE BLACK AND WHITE WIRE TO A 120VAC SERVICE.
END TO END ACPSPS REQUIRE 120VAC FIELD WIRING FROM J-BOX TO J-BOX. REPLACE LIGHTS WITH LED LIGHTS ONLY.

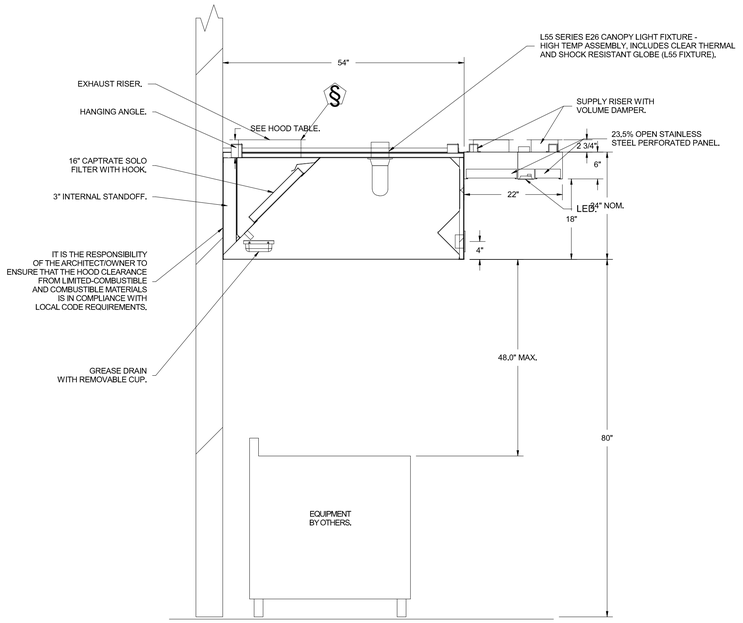

SECTION VIEW – MODEL
5HOOND-2-ACOPSP-F
HOOD)

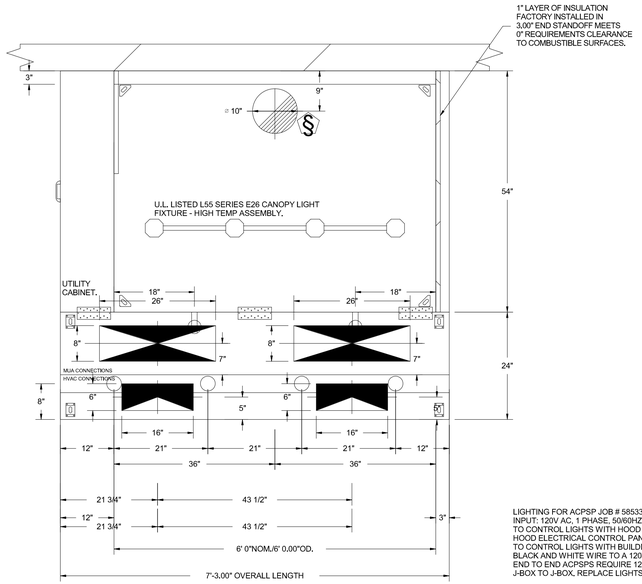

PLAN VIEW – HOOD #3 (OVEN 6' 0.00"OD)LONG
5424ND-2-ACPSP-F

ACPSP SHIPS LOOSE FOR FIELD INSTALLATION

LIGHTING FOR ACPSP JOB # 5853364 - HOOD #3
INPUT: 120V AC, 1 PHASE, 50/60HZ, 3.5 WATTS PER LIGHT.
TO CONTROL LIGHTS WITH HOOD LIGHT SWITCH, WIRE PER HOOD ELECTRICAL CONTROL PANEL SCHEMATIC.
TO CONTROL LIGHTS WITH BUILDING LIGHT SWITCH, WIRE BLACK AND WHITE WIRE TO A 120VAC SERVICE.
END TO END ACPSPS REQUIRE 120VAC FIELD WIRING FROM J-BOX TO J-BOX. REPLACE LIGHTS WITH LED LIGHTS ONLY.

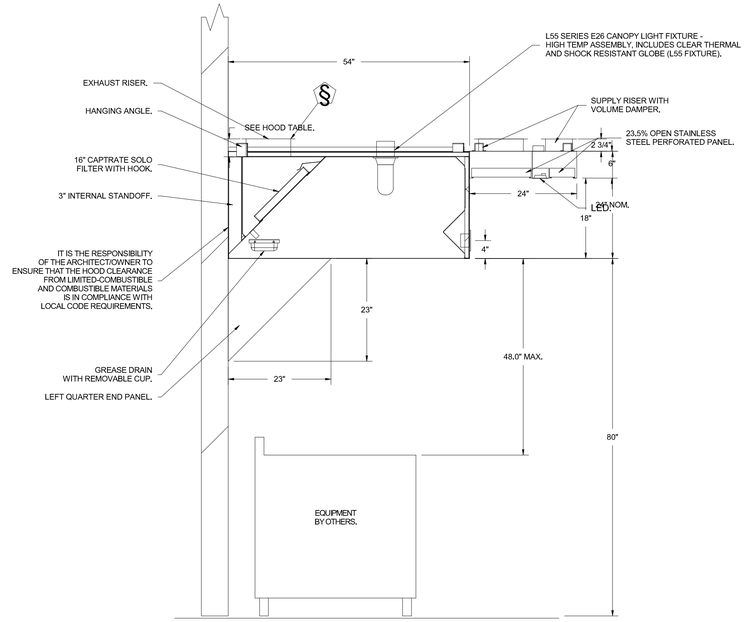

SECTION VIEW – MODEL
5HOOND-2-ACOPSP-F
HOOD)

CAPTIVEAIRE
Charlotte/Piedmont
6303 Carmel Road, Suite 105, Charlotte, NC, 28226 PHONE: (704) 844-9088 FAX: (919) 227-5952 EMAIL: reg30@captiveaire.com

Love's Bojangles - Nicholson MS - Electric Heat
20 Hwy 607,
Nicholson, MS, 39463

2/10/2023

5853364

agrant

3/4" = 1'-0"

MASTER DRAWING

HFA
HARRISON FRENCH & ASSOCIATES, LTD
t 479.273.7780
1705 S. Walton Blvd., Suite 3
Bentonville, Arkansas 72712
www.hfa-ae.com

STIPULATION FOR REUSE
THIS DRAWING WAS PREPARED FOR USE ON A SPECIFIC SITE AT CONTEMPLATION. THIS DRAWING IS SUITABLE FOR USE ON A DIFFERENT SITE ONLY IF THE SITE IS SUBJECT TO USE OF THIS DRAWING FOR REFERENCE PURPOSES ONLY. THE ARCHITECT REQUIRES THE SERVICES OF PROPERLY QUALIFIED PERSONS FOR ADAPTATION. REPRODUCTION OF THIS DRAWING FOR USE ON ANOTHER SITE IS NOT AUTHORIZED AND MAY BE CONTRARY TO LAWS.

STORE NUMBER: 860
I-59, EXIT 1
NICHOLSON, MS 39466
JOB NUMBER: 03-23-30009
T1-90

ISSUE BLOCK		
1	ADD 1	02/16/23

CHECKED BY:	CAPTIVEAIRE
DRAWN BY:	CAPTIVEAIRE
DOCUMENT DATE:	2/7/2023
PROTO:	T1-90
PROTO CYCLE:	Q3 - 2022

FOR REFERENCE ONLY

CAPTIVEAIRE
KITCHEN HOOD
DETAIL

SHEET:
BGH102

2/10/2023 12:25:03 PM
C:\Users\reg30\Captiveaire\Documents\2021 Revit Projects\Love_Nicholson_MS_MEP_FT_R5_v21_HFA-Parker-Chenoweth.rvt
6030-BGH102-CAPTIVEAIRE KITCHEN HOOD DETAIL ADD 1