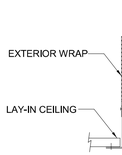

12 TYPICAL SURFACE MOUNT RETURN GRILLE

NTS

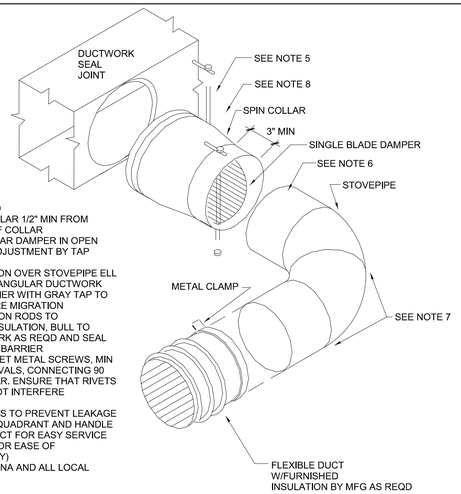

NOTES:
1. SUPPORT AS REQD
2. BAND FLEX TO COLLAR 1/2" MIN FROM OUTBOARD END OF COLLAR
3. INSTALL SPIN COLLAR DAMPER IN OPEN POSITION; FINAL ADJUSTMENT BY TAP CONTRACTOR
4. PROVIDE INSULATION OVER STOVEPIPE ELL TO EDGE OF RECTANGULAR DUCTWORK SEAL VAPOR BARRIER WITH GRAY TAP TO PREVENT MOISTURE MIGRATION
5. PROVIDE EXTENSION RODS TO ACCOMMODATE INSULATION, BULL TO EDGE OF DUCTWORK AS REQD AND SEAL TO EFFECT VAPOR BARRIER
6. POP RIVET OR SHEET METAL SCREWS, MIN 3 EA AT 120° INTERVALS, CONNECTING 90 ELL TO SPIN COLLAR. ENSURE THAT RIVETS OR SCREWS DO NOT INTERFERE W/DAMPER.
7. TAPE & SEAL JOINTS TO PREVENT LEAKAGE
8. INSTALL LOCKING QUADRANT AND HANDLE ON BOTTOM OF DUCT FOR EASY SERVICE (SHOWN ON TOP FOR EASE OF ILLUSTRATION ONLY)
9. INSTALL PER SMACNA AND ALL LOCAL CODES

11 SPIN COLLAR FLEXIBLE DUCT CONNECTOR WITH DAMPER AND STOVEPIPE ELBOW

NTS

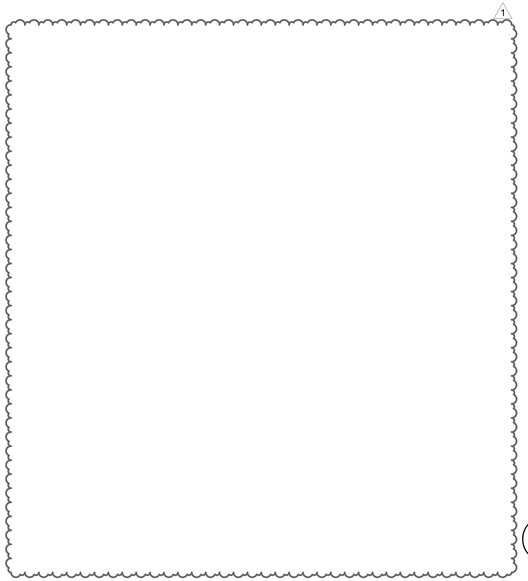

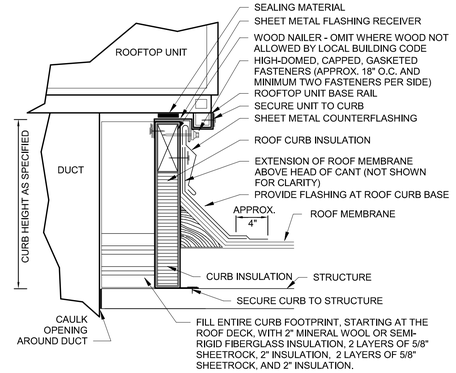

NOTES:
1. CUT METAL DECKING TO ALLOW CURB INSTALLATION ON STEEL FRAMING. AFTER CURB IS SET IN PLACE, TRIM REMAINING METAL DECKING AND INSTALL WITHIN CURB. TACK WELD DECKING TO SUPPORT STEEL. DO NOT WELD INTERIOR DECKING TO ROOF CURB. PROVIDE ADDITIONAL CROSS FRAMING TO SUPPORT INTERIOR DECKING AND FILL MATERIAL AS REQUIRED.
2. REFER TO SPECIFICATIONS FOR ADDITIONAL REQUIREMENTS FOR ROOF CURBS, ANCHORING AND SEISMIC/WIND RESISTANCE.

9 ROOF CURB DETAIL

NTS

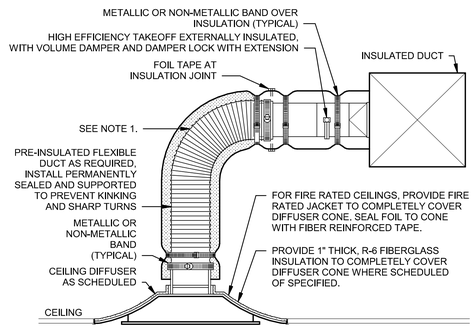

NOTES:
1. EXTEND RIGID METAL DUCT SO THAT MAXIMUM FLEXIBLE DUCT LENGTH DOES NOT EXCEED 5'-0". PROVIDE RIGID 90° ELBOW WHERE REQUIRED TO KEEP FLEXIBLE DUCT WITHIN 5'-0" LENGTH LIMITATION.

8 TYPICAL FLEXIBLE DUCT DIFFUSER DETAIL

NTS

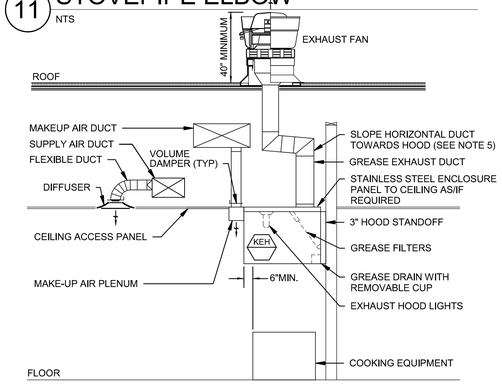

NOTES:
1. SUBMIT SHOP DRAWINGS OF ALL HOOD SYSTEMS TO CITY FOR APPROVAL PRIOR TO INSTALLATION.
2. TOTAL HOOD SYSTEM TO BE IN COMPLETE CONFORMANCE WITH NFPA, AND ALL LOCAL CODES AND REGULATIONS.
3. COORDINATE ALL FIRE PROTECTION SYSTEMS WITH FIRE PROTECTION CONTRACTOR WHO SHALL ALSO BE RESPONSIBLE FOR ALL PERMITS AND TESTING REQUIRED.
4. PROVIDE WRAP SYSTEM WHERE APPROVED BY LOCAL CODES IN LIEU OF RATED ENCLOSURE
5. PROVIDE ACCESS PANELS AS REQUIRED BY LOCAL CODE AND PER PLAN.
6. HOODS SHALL EXTEND MINIMUM 6" BEYOND ALL OPEN SIDES AND FRONT EDGE OF FOOD COOKING EQUIPMENT BEING SERVED.

7 KITCHEN EXHAUST HOOD ELEVATION DETAIL

NTS

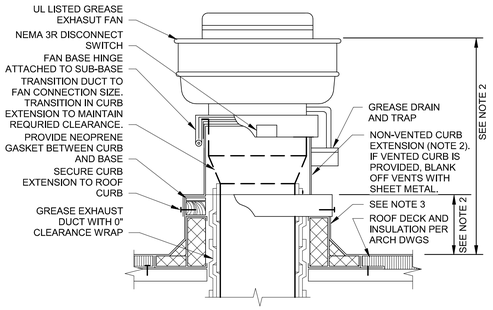

NOTES:
1. ARRANGEMENT SHOWN IS SCHEMATIC, ADJUST TO SUIT FIELD CONDITIONS AND MEET LOCAL CODE.
2. PROVIDE CURB EXTENSION MADE FROM NON-COMBUSTIBLE MATERIAL OF HEIGHT REQUIRED TO MOUNT FAN BASE A MINIMUM 18 INCHES ABOVE COMBUSTIBLE CURB MATERIAL AND DISCHARGE GREASE OUTLET A MINIMUM OF 40 INCHES ABOVE ROOF SURFACE OR ANY ADJACENT BUILDING STRUCTURE WITHIN 10 FEET OF OUTLET, WHICHEVER IS HIGHER.
3. PREFABRICATED INSULATED ROOF CURB WITH TREATED WOOD NAILER, CANT, AND STEP AS REQUIRED TO ACCOMMODATE ROOF INSULATION. FRAME AND SECURE CURB TO ROOF WITH METHOD CONSISTENT WITH ROOF CONSTRUCTION. ROOF CURB SHALL BEAR ON ROOF STRUCTURE. FOR SLOPED ROOFS, PROVIDE CURB WITH DIMENSIONS CAPABLE OF COMPENSATING ROOF SLOPE TO ENSURE FAN IS INSTALLED LEVEL. REFER TO ARCHITECTURAL DRAWINGS AND CURB MANUFACTURER'S DETAILS FOR MORE INFORMATION.

HIGH WIND STRAPPING: PROVIDE STAINLESS STEEL STRAPS OF LENGTH, WIDTH, THICKNESS, AND SPACING SUFFICIENT TO SECURE FAN TO CURB TO WITHSTAND WIND SPEED REQUIREMENTS PER LOCAL CODE. WRAP STRAPS OVER FAN AND SECURELY ATTACH TO OPPOSITE SIDE OF THE CURB.

6 UPBLAST GREASE EXHAUST FAN DETAIL

NTS

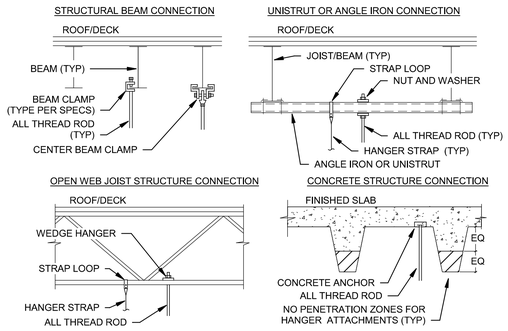

NOTES:
1. ALL ATTACHMENTS SHALL BE INSTALLED PER MANUFACTURER'S REQUIREMENTS AND SHALL BE APPROVED FOR THE SPECIFIC APPLICATION.
2. COORDINATE ALL ATTACHMENTS WITH ARCHITECT AND STRUCTURAL ENGINEER.
3. REFER TO SPECIFICATIONS FOR MORE INFORMATION ON APPROVED ATTACHMENT METHODS.
4. REFER TO SPECIFICATIONS FOR REQUIREMENTS RELATING TO SEISMIC INSTALLATIONS.
5. FOR OPEN WEB JOIST STRUCTURE, CONTRACTOR MAY HANG FROM TOP CHORD AND RUN DUCT AND PIPING THROUGH WEB JOIST WHEN APPROPRIATE. ANY CONCENTRATED LOADS NOT OCCURRING AT JOIST PANEL POINTS MUST BE REVIEWED BY A STRUCTURAL ENGINEER FOR FIELD INSTALLED PANEL BRACE REQUIREMENTS.

5 HANGER UPPER ATTACHMENT DETAILS

NTS

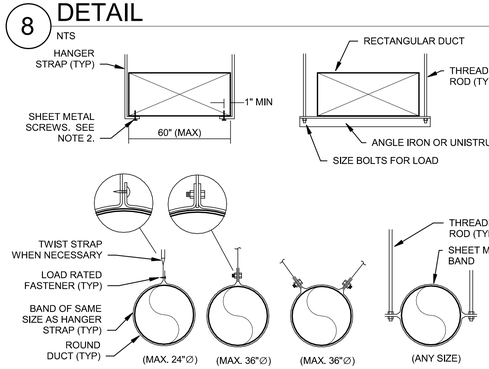

NOTES:
1. USE THREADED ROD FOR RECTANGULAR DUCTS LARGER THAN 60" WIDE.
2. OMIT SHEET METAL SCREWS IF HANGER STRAP IS CONTINUOUS AND LOOPS UNDER ENTIRE RECTANGULAR DUCT.
3. FOR ROUND DUCTS LARGER THAN 36"∅, USE TWO HANGER RODS TO SUPPORT DUCT FROM EACH SIDE.
4. HANGERS MUST NOT DEFORM DUCT SHAPE.

4 DUCT HANGER LOWER ATTACHMENT DETAILS

NTS

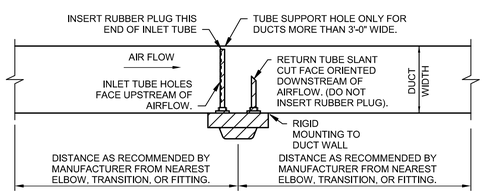

NOTES:
1. INSTALL DETECTOR SO THAT IT IS ACCESSIBLE FOR CLEANING AND MOUNT IN ACCORDANCE WITH THE MANUFACTURER'S INSTRUCTIONS.
2. PERMANENTLY AND CLEARLY IDENTIFY THE LOCATION OF THE DETECTOR IN THE DUCT WITH MINIMUM 1/2" LETTERING.
3. DETECTOR SHALL BE LISTED FOR PROPER OPERATION OVER THE COMPLETE RANGE OF AIR VELOCITIES, TEMPERATURE, AND HUMIDITY EXPECTED AT THE DETECTOR WHEN THE AIR-HANDLING SYSTEM IS OPERATING.
4. SEAL ALL PENETRATIONS OF DUCT IN THE VICINITY OF A DETECTOR TO PREVENT ENTRANCE OF SURROUNDING AIR AND POSSIBLE DILUTION OR REDIRECTION OF SMOKE WITHIN THE DUCT.
5. PROVIDE REMOTE ALARM INDICATOR FOR IN-DUCT SMOKE DETECTOR THAT IS INSTALLED IN LOCATION OR ARRANGEMENT WHERE THE DETECTOR ALARM INDICATOR IS NOT READILY VISIBLE TO RESPONDING PERSONNEL. INSTALL REMOTE ALARM INDICATOR IN A READILY ACCESSIBLE LOCATION AND CLEARLY LABEL TO INDICATE BOTH ITS FUNCTION (e.g. "IN-DUCT SMOKE DETECTOR ALARM:) AND THE AIR-HANDLING UNIT(S) ASSOCIATED WITH THE DETECTOR.

3 DUCT SMOKE DETECTOR DETAIL

NTS

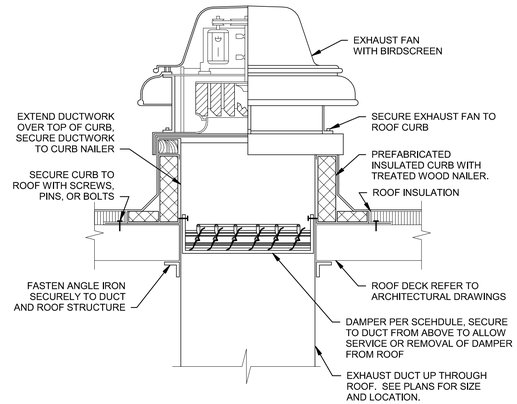

2 DOWNBLAST EXHAUST FAN DETAIL

NTS

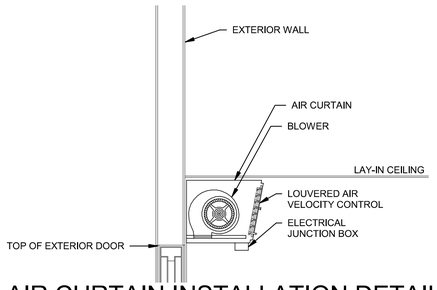

1 AIR CURTAIN INSTALLATION DETAIL

NTS

HFA
HARRISON FRENCH & ASSOCIATES, LTD
t 479.273.7780
1705 S. Walton Blvd., Suite 3
Bentonville, Arkansas 72712
www.hfa-ae.com

STIPULATION FOR REUSE
THIS DRAWING WAS PREPARED FOR USE ON A SPECIFIC SITE AT THE TIME OF PREPARATION. CONTEMPORANEOUSLY WITH ITS ISSUE DATE. THIS DRAWING MAY NOT BE SUITABLE FOR USE ON A DIFFERENT SITE OR AT A LATER DATE. ANY REUSE OR USE OF THIS DRAWING FOR REFERENCE ONLY ON ANY SITE OR AT ANY TIME IS REQUIRED THE SERVICES OF PROPERLY LICENSED ARCHITECT. ANY REUSE OR REPRODUCTION OF THIS DRAWING FOR ANY PURPOSE OTHER THAN THE ORIGINAL IS UNAUTHORIZED AND MAY BE CONTRARY TO LAW.

Love's
STORE NUMBER: 860
I-59, EXIT 1
NICHOLSON, MS 39466
JOB NUMBER: 03-23-30009
T1-90

ISSUE BLOCK		
1	ADD 1	02/16/23

CHECKED BY:	JKR
DRAWN BY:	PRC
DOCUMENT DATE:	2/7/2023
PROTO:	T1-90
PROTO CYCLE:	Q3 - 2022

GREG J. SCHLUTERMAN LICENSED PROFESSIONAL ENGINEER MISSISSIPPI
2023.02.21 09:29:42-06'00'

MECHANICAL DETAILS

SHEET: BGM501

2/20/2023 12:30:01 PM
C:\Users\prc\Autodesk Construction Cloud\Documents\2021 Revit Projects\Loves_Nicholson_MS_MEP_FT_R23_v21_HFA-Parker Chenoweth.rvt
6016-BGM501-MECHANICAL DETAILS-ADD1