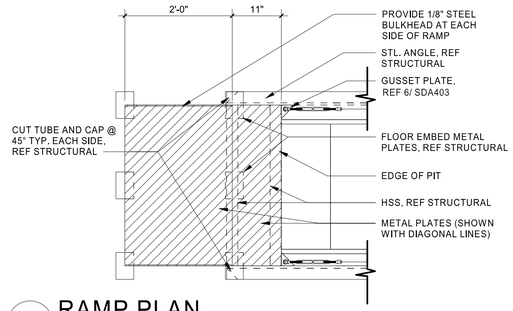

14 RAMP PLAN
3/4" = 1'-0"

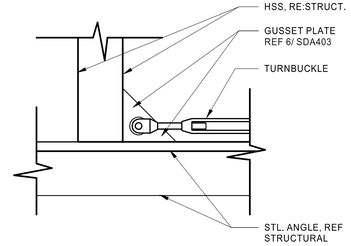

13 RAMP DETAIL
3" = 1'-0"

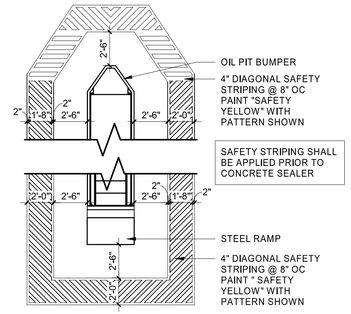

12 STRIPING DETAIL
3/16" = 1'-0"

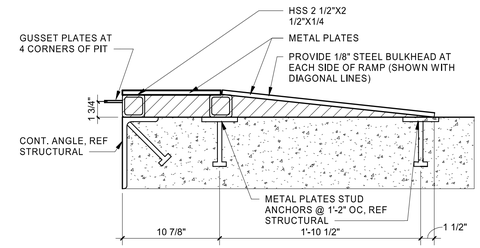

11 METAL PLATE DETAIL
1 1/2" = 1'-0"

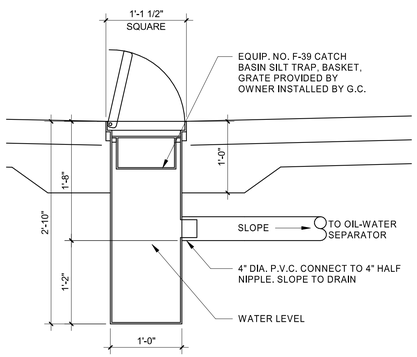

10 CATCH BASIN SECTION
1" = 1'-0"

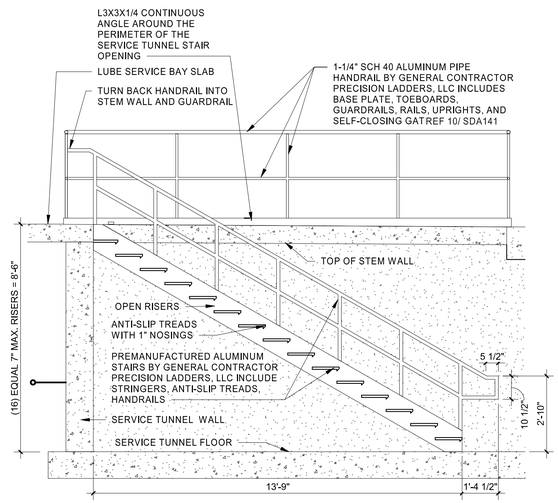

9 SERVICE TUNNEL MAIN STAIR SECTION
3/8" = 1'-0"

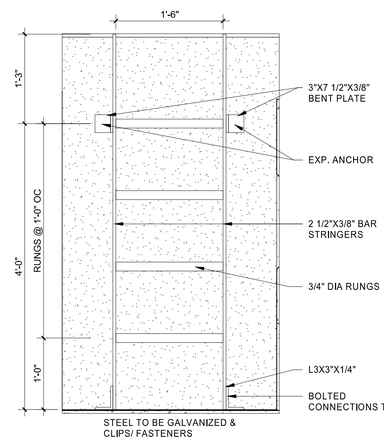

8 LUBE PIT LADDER
1" = 1'-0"

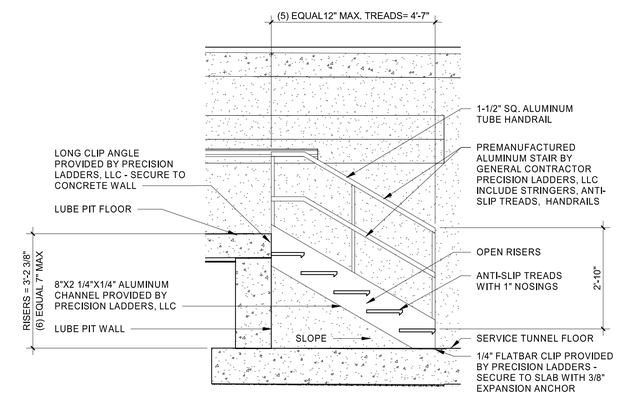

7 LUBE PIT/ SERVICE TUNNEL STAIR SECTION
1/2" = 1'-0"

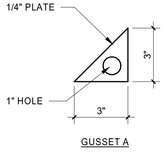

6 PLATE DETAIL
3" = 1'-0"

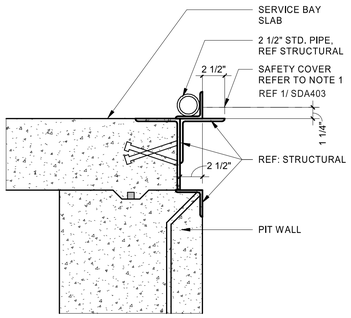

5 RAIL DETAIL
1 1/2" = 1'-0"

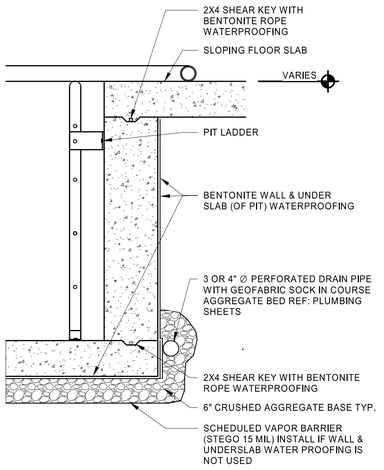

4 PIT WATERPROOFING
3/4" = 1'-0"

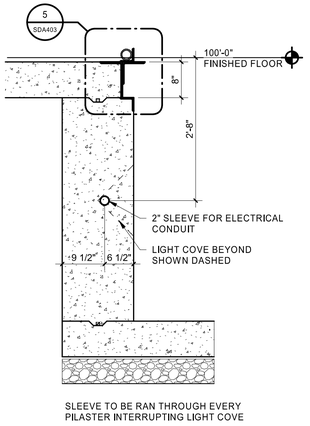

3 WALL SECTION
3/4" = 1'-0"

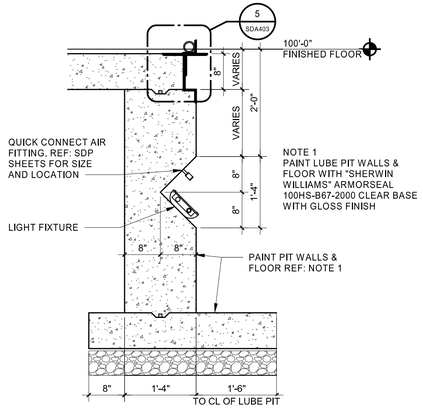

2 LIGHT RECESS (WALL) SECTION
3/4" = 1'-0"

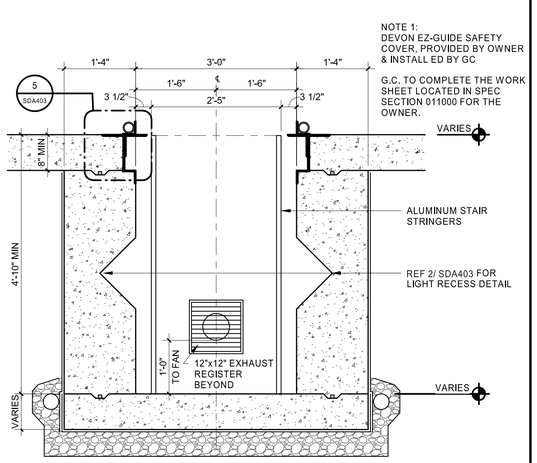

1 LUBE PIT SECTION
3/4" = 1'-0"

HFA
HARRISON FRENCH & ASSOCIATES, PLLC
t 479.273.7780
1705 S. Walton Blvd., Suite 3
Bentonville, Arkansas 72712
www.hfa-ae.com

STIPULATION FOR REUSE
THIS DRAWING WAS PREPARED FOR USE IN CONNECTION WITH LOVE'S NICHOLSON, MS CONSTRUCTION WORK WITH ITS ISSUE DATE ON 3/09/23 AND IT IS NOT INTENDED FOR USE ON ANY OTHER PROJECT SITE OR AT A LATER TIME. REGARDLESS OF THE ORIGINAL PURPOSE OR EXAMPLE ON ANOTHER PROJECT, LICENSED ARCHITECTS AND ENGINEERS RETAIN ALL COPYRIGHTS. ANY REPRODUCTION OF THIS DRAWING FOR ANY PURPOSE OTHER THAN THE AUTHORIZED AND MAY BE CONTRARY TO THE LAW.

Love's

STORE NUMBER: 860
I-59, EXIT 1
NICHOLSON, MS 39466
JOB NUMBER: 03-23-30009
SPEEDCO_4 BAY

ISSUE BLOCK

CHECKED BY:	MAP
DRAWN BY:	ASE
DOCUMENT DATE:	02/06/23
PROTO:	SPEEDCO_4 BAY
PROTO CYCLE:	Q4 - 2022

REGISTERED ARCHITECT
BOGUE L. EBBRECHT
4925
STATE OF ARKANSAS
Bogue Louis Ebbrecht
Digitally signed by Bogue Louis Ebbrecht
DN: C=US, E=bebrecht@hfa-ae.com, L=Bogue Louis Ebbrecht, O=Harrison French and Associates, L=Bentonville, S=ARKANSAS, C=US
Date: 2023.02.07 15:57:59-06'00'

LUBE PIT SECTIONS & DETAILS

SHEET:
SDA403

2/6/2023 10:37:14 PM
C:\Users\melyssa.pranger\Documents\2021 Revit Projects\Loves_Nicholson_MS_ARC_SPEEDCO_4B_r21_HFA.Melyssa.Pranger.rvt
E915-SDA403-LUBE PIT SECTIONS & DETAILS