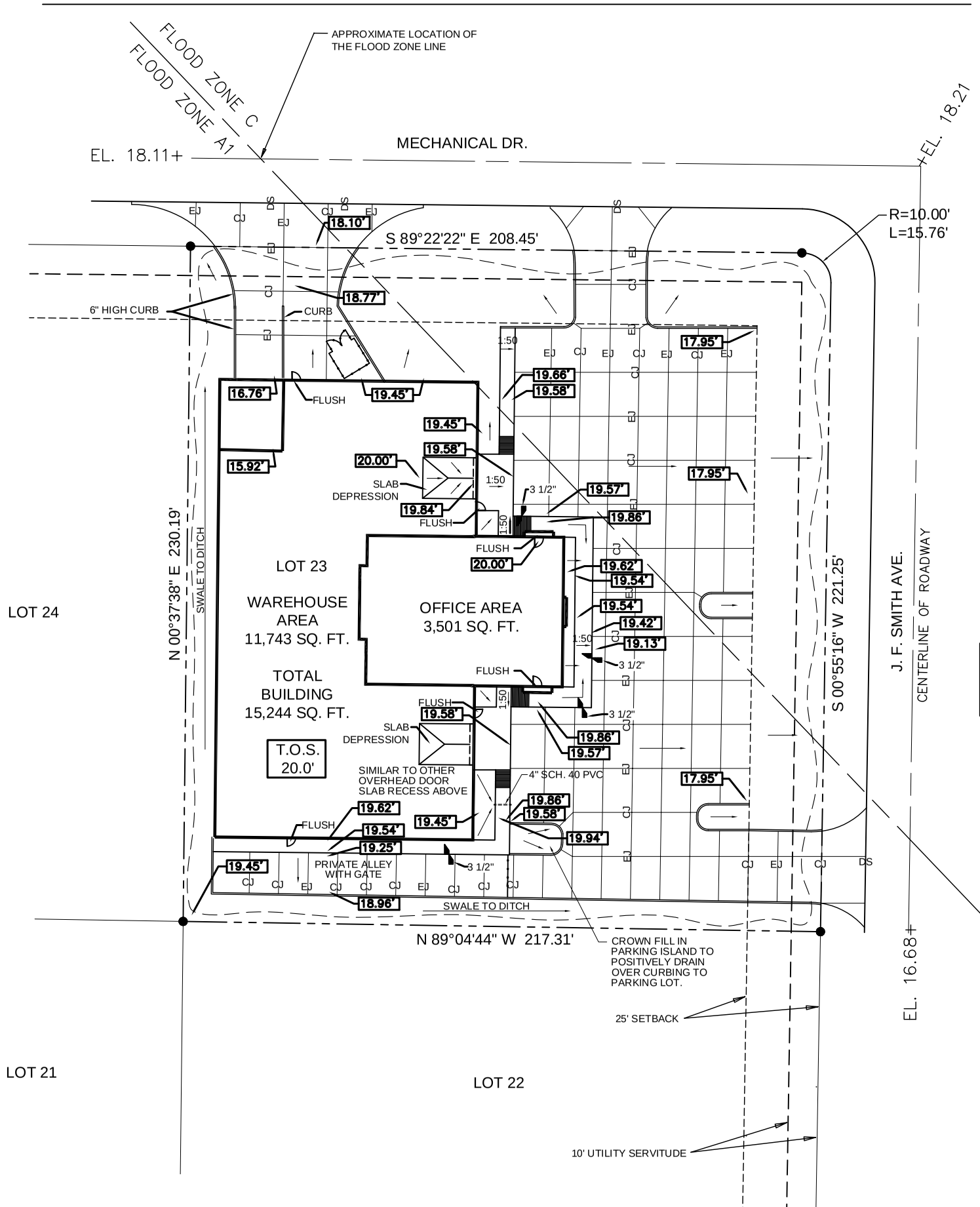

PAVING/DRAINAGE PLAN
SCALE: 1"=20'-0"

NOT APPROVED FOR CONSTRUCTION

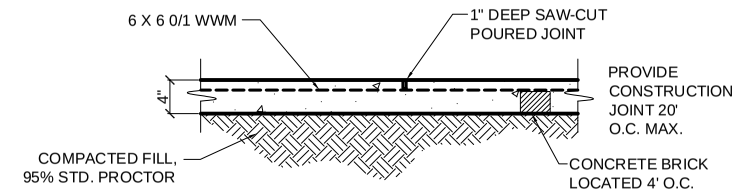

SIDEWALK JOINT (SJ)
N. T. S.

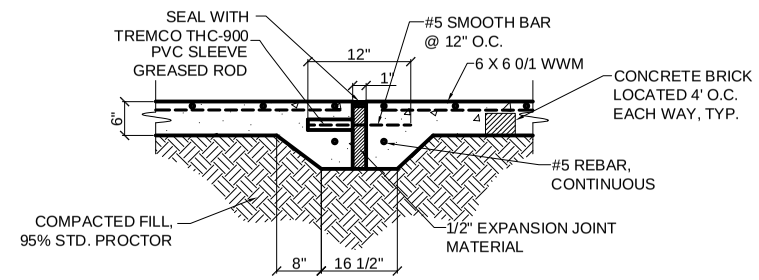

EXPANSION JOINT (EJ)
N. T. S.

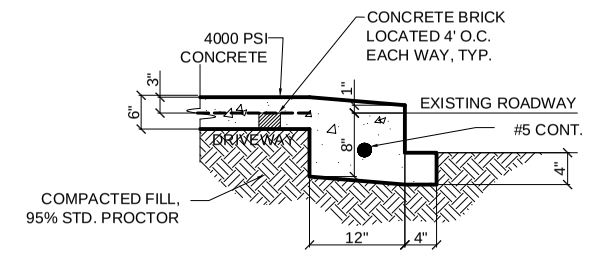

DRIVEWAY SECTION (DS)
N. T. S.

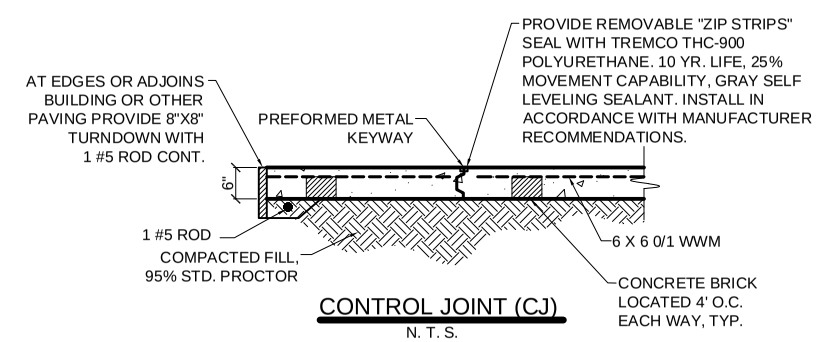

CONTROL JOINT (CJ)
N. T. S.

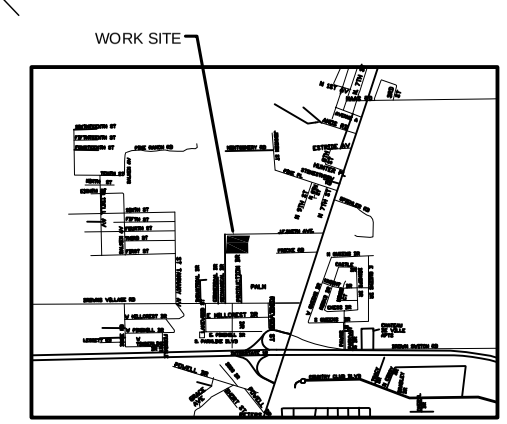

VICINITY MAP
N.T.S.

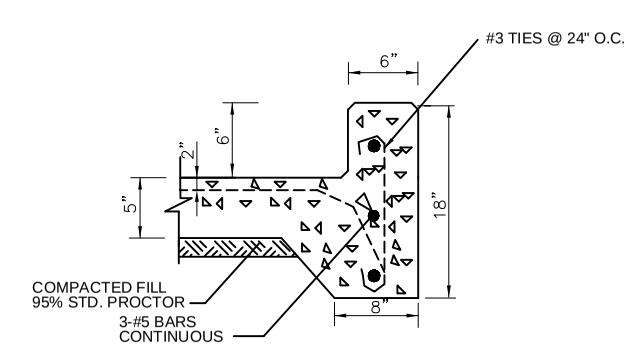

TYPICAL CURB DETAIL
N. T. S.

LEGEND:

- PROPERTY LINE
- SETBACK
- NEW BUILDING
- NEW DRAIN LINE
- EXPANSION JOINT
- CONTROL JOINT
- SLOPE LINES
- T.O. GRATE ELEVATION
- INVERT ELEVATION
- 00.00 NEW ELEVATIONS
- 00.00 EXISTING ELEVATIONS
- TEMPORARY SILT FENCING
- VERTICAL CHANGE

DAMMON ENGINEERING, INC.
EMMETT DAMMON

ARCHITECT
ROBERT WILTSE

1095 FLORIDA AVENUE
SLIDELL, LA. 70458
985-649-5832

WEBSITE:
WWW.DAMMONENGINEERING.COM

EMAIL:
DAMMONENG@BELLSOUTH.NET

ARCHITECTURE
ENGINEERING
STUDIES
PLANNING
INVESTIGATION
EXPERT WITNESS

NEW OFFICE/ WAREHOUSE

O'BRIEN / NORTH SHORE FLOORING DISTRIBUTORS
J.F. SMITH AVE.
SLIDELL, LA

PAVING/ DRAINAGE PLAN

REV:

SCALE: AS NOTED
JOB#:
DATE: 1-4-08
SHEET
C-3
OF