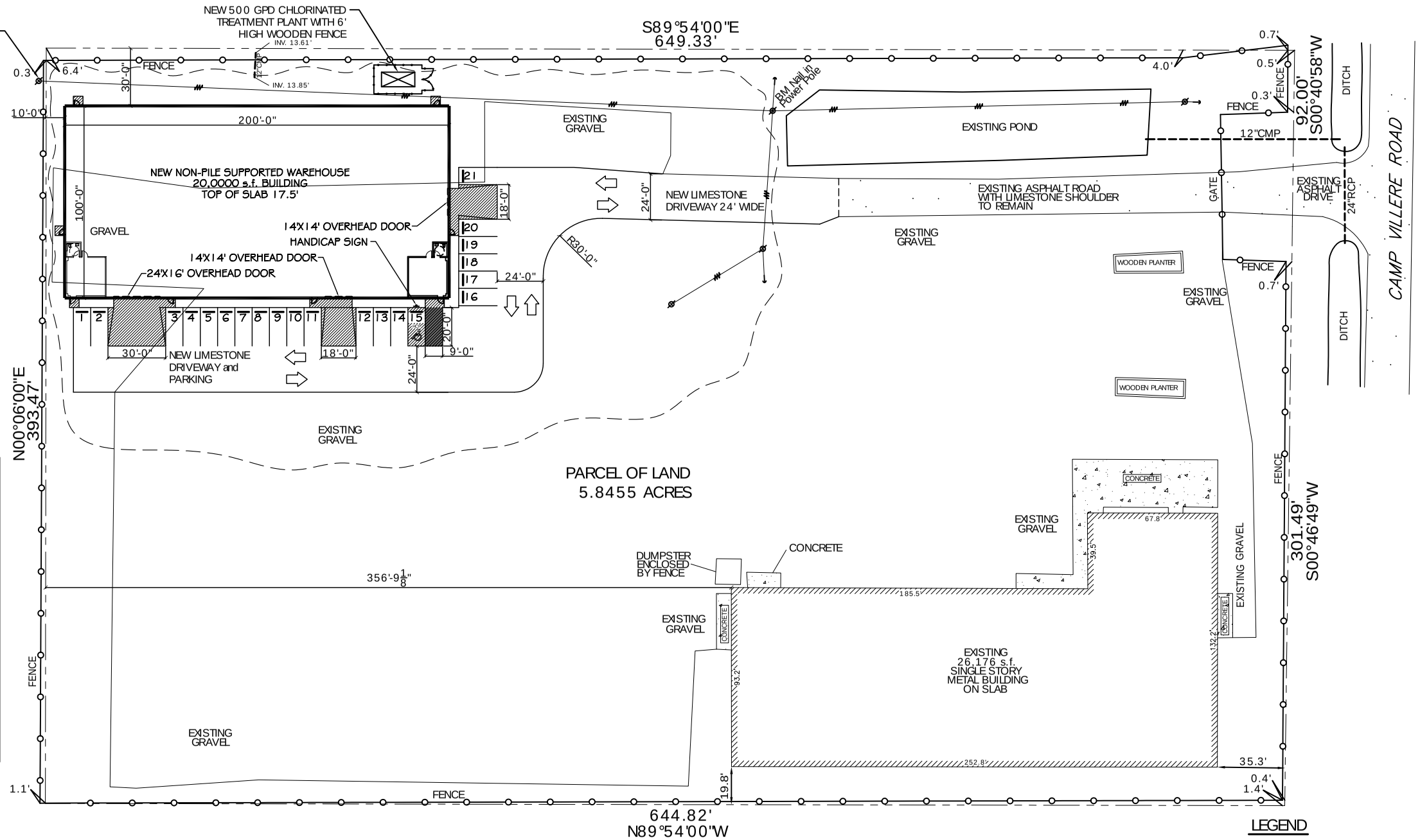

VICINITY MAP
N.T.S.

PARKING REQUIREMENTS

No. of REQUIRED PARKING

INDUSTRIAL OCCUPANCY 1 PARKING SPACE PER 1,000 Sq FT.
19,200 SQ FT OF INDUSTRIAL / WAREHOUSE SPACE

OFFICE SPACE PROVIDE 1 SPACE FOR EVERY 350 SQ FT.
800 SQ FT OF OFFICE SPACE SPACE

INDUSTRIAL Sq fT.	19,200 Sq. ft.
OFFICE Sq. ft.	800 Sq. ft.
TOTAL	20,000 Sq. ft.

INDUSTRIAL
19,200 / 1000 = (19.2) SAY 19 PARKING SPACES REQUIRED

OFFICE
800 / 350 = (2.28) SAY 2 PARKING SPACES REQUIRED

HANDICAP = 1 SPACE REQUIRED

21 PARKING SPACES REQUIRED
(INCLUDING 1 HANDICAP)

SITE PLAN
SCALE: 1"= 30'-0"

LEGEND

- SILT FENCING
- PROPERTY LINE
- BUILDING SETBACK
- FENCE
- NEW BUILDING OUTLINE
- HCP - HANDICAP PARKING
- HANDICAP PARKING SIGN
- TRAFFIC FLOW DIRECTION
- NEW CONCRETE AREAS

LEGAL DESCRIPTION

TOPOGRAPHIC SURVEY OF 5.8455 ACRES PARCEL OF LAND SECTIONS 32 & 37, T8S-R14E ST. TAMMANY PARISH LOUISIANA

ZONING M-2

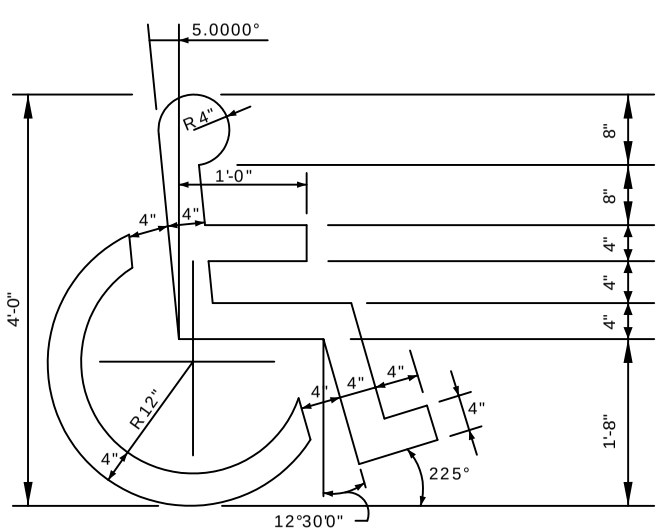

HANDICAP SYMBOL DETAIL
N. T. S.

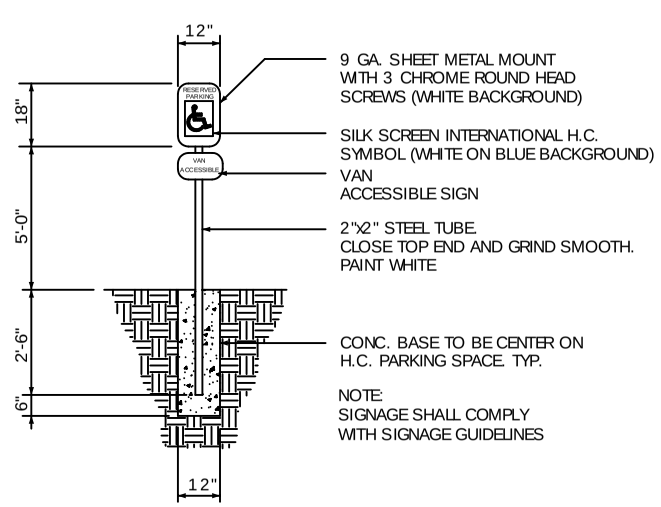

HANDICAP PARKING SIGN
N. T. S.

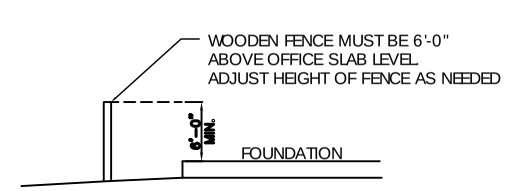

WOODEN FENCE DETAIL
N.T.S.

GENERAL NOTES

1. CONCRTETE PARKING AREA TO BE 3,000 P.S.I. MINIMUM STRENGTH CONCRETE, SHALL BE 5" THICK PROVIDE EXPANSION JOINTS AT 20'-0" ON CENTER, TYP.
2. ALL OTHER PARKING AREAS TO BE BE GRAVEL / LIMESTONE PARKING, TYPICAL.

DAMMON ENGINEERING, INC.

CHIEF ENGINEER
EMMETT DAMMON, P.E.

CHIEF ARCHITECT
ROBERT WILTSE

1095 FLORIDA AVENUE
SLIDELL, LA. 70458
OFFICE: 985-649-5832
FAX: 985-641-5950

WEBSITE:
WWW.DAMMONENGINEERING.COM

EMAIL:
DAMMONENG@BELLSOUTH.NET

ARCHITECTURE
ENGINEERING
STUDIES
PLANNING
INVESTIGATION
EXPERT WITNESS

NEW WAREHOUSE

BOB BAKER
CAMP VILLERE
SLIDELL, LA

SITE PLAN

REV:

SCALE: AS NOTED
JOB#: 1927
DATE: 3-28-08
SHEET 3

C-2

OF 19