PANEL: EXISTING MDP-1
LOCATION: NEW MTL BLDG.
FEEDER SOURCE: CLECO

VOLTAGE: 120/208V, 2000A 3Ø, 4W, W/ MAIN BRK.
ENCLOSURE: SURFACE MOUNTED W/EQUIPMENT GND BAR
SWITCHBOARD W/GFI PROTECTED MAIN BRK

CKT NO.	THHN WIRE SIZE	LOAD DESCRIPTION LOCATION	BREAKER AMP	BREAKER POLE	LOAD (VA)	A/B B/B C/B	LOAD (VA)	BREAKER POLE	BREAKER AMP	LOAD DESCRIPTION LOCATION	THHN WIRE SIZE	CKT NO.
1 3 5	3/0	VMC	200	3	72800		36400	3	100	MINI MILL	#3	2 4 6
7 9 11	3/0	PANEL "L-4"	200	3	67942		32532	3	200	PANEL "L-3"	3/0	8 10 12
13 15 17	#3	8 FT LATHE	100	3	36400		36400	3	100	MINI MILL	#3	14 16 18
19 21 23	3/0	PANEL "L-2"	200	3	22623		20782	3	200	PANEL "L-1"	3/0	20 22 24
25	-	SPARE	20	1	-		-	1	20	SPARE	-	26
27	-	SPARE	20	1	-		-	1	20	SPARE	-	28
29	-	SPARE	20	1	-		-	1	20	SPARE	-	30
31	-	SPARE	20	1	-		-	1	20	SPARE	-	32
33	-	SPARE	20	1	-		-	1	20	SPARE	-	34
35	-	SPARE	-	-	-		-	-	-	SPARE	-	36
37	-	SPARE	-	-	-		-	-	-	SPARE	-	38
39	-	SPARE	-	-	-		-	-	-	SPARE	-	40
41	-	SPARE	-	-	-		-	-	-	SPARE	-	42

SOLID NEUTRAL / NEUTRAL WIRE (W)

TOTAL CONNECTED LOAD (VA): A/B= 115293 B/B= 115293 C/B= 115293

GROUND BUS / GROUND WIRE (G)

PANEL: EXISTING PNL-L1
LOCATION: -
FEEDER SOURCE: MDP-1

VOLTAGE: 120/208V, 225A 1Ø, 3W
ENCLOSURE: SURFACE MOUNTED W/EQUIPMENT GND BAR

CKT NO.	THHN WIRE SIZE	LOAD DESCRIPTION LOCATION	BREAKER AMP	BREAKER POLE	LOAD (VA)	A/B B/B	LOAD (VA)	BREAKER POLE	BREAKER AMP	LOAD DESCRIPTION LOCATION	THHN WIRE SIZE	CKT NO.
1 3		HVAC	50	2	9276		7612	2	60	HVAC		2 4
5 7		HVAC	60	2	7716		9276	2	60	HVAC		6 8
9 11		SPARE	30	2	0		0	2	30	SPARE		10 12
13	12	UNKNOWN	20	1	1331		728	1	20	UNKNOWN	12	14
15	12	UNKNOWN	20	1	499		291	1	20	UNKNOWN	12	16
17	12	UNKNOWN	20	1	228		1622	1	20	UNKNOWN	12	18
19	12	UNKNOWN	20	1	936		540	1	20	UNKNOWN	12	20
21 23		HVAC	40	2	4056		4201	2	40	HVAC		22 24
25	12	UNKNOWN	20	1	686		291	1	20	UNKNOWN	12	26
27	12	UNKNOWN	20	1	0		353	1	20	UNKNOWN	12	28
29	12	UNKNOWN	20	1	2225		0	1	20	UNKNOWN	12	30
31	12	UNKNOWN	20	1	2225		395	1	20	UNKNOWN	12	32
33	12	UNKNOWN	20	1	769		603	1	20	UNKNOWN	12	34
35	12	UNKNOWN	20	1	0		748	1	20	UNKNOWN	12	36
37	12	DOUBLE WIRED	20	1	644		0	1	20	SIGN	12	38
39 41		CHURCH NEXT DOOR	100	2	- -		0	2	70	UNKNOWN		40 42

SOLID NEUTRAL / NEUTRAL WIRE (W)

TOTAL CONNECTED LOAD (VA): A/B= 7911 B/B= 12871

GROUND BUS / GROUND WIRE (G)

PANEL: EXISTING PNL-L2
LOCATION: -
FEEDER SOURCE: MDP-1

VOLTAGE: 120/208V, 200A 3Ø, 3W
ENCLOSURE: SURFACE MOUNTED W/EQUIPMENT GND BAR

CKT NO.	THHN WIRE SIZE	LOAD DESCRIPTION LOCATION	BREAKER AMP	BREAKER POLE	LOAD (VA)	A/B B/B C/B	LOAD (VA)	BREAKER POLE	BREAKER AMP	LOAD DESCRIPTION LOCATION	THHN WIRE SIZE	CKT NO.
1 3	3	SPARE	100	2	0		0	2	70	SPARE	4	2 4
5	10	UNKNOWN	30	1	208		0	2	100	SPARE	3	6 8
7	12	UNKNOWN	20	1	0							
9	12	UNKNOWN	30	1	0		3467	2	20	BAY LIGHTS	12	10 12
11 13 15	3	SPARE	100	3	0		3784	2	20	BAY LIGHTS	12	14 16
17	3	UNKNOWN	20	1	0		14392	2	80	UP ST HVAC	3	18 20
19 21	10	UNKNOWN	30	2	0		11232	2	30	EXTERIOR LIGHTS	10	22 24
23	12	UNKNOWN	30	1	1040							
25	12	UNKNOWN	20	1	0		228	1	20	UNKNOWN	12	26
27 29	4	UP ST. HVAC	60	2	3827		145	1	20	TWIN UPST OFFICE	12	28
							624	1	20	TWIN UPST OFFICE	12	30
31	12	UNKNOWN	20	1	0		0	1	20	TWIN UPST OFFICE	12	32
33	12	UNKNOWN	20	1	350		0	1	20	TWIN UPST OFFICE	12	34
35	12	TWIN 20 AMP	20	1	1935		1800	1	20	NEW RECEPTACLES	12	36
37	12	NEW RECEPTACLES	20	1	1800		1800	1	20	NEW RECEPTACLES	12	38
39	12	NEW RECEPTACLES	20	1	1800		1800	1	20	NEW RECEPTACLES	12	40
41	12	NEW RECEPTACLES	20	1	1800		-	-		SPACE		42

SOLID NEUTRAL / NEUTRAL WIRE (W)

TOTAL CONNECTED LOAD (VA): A/B= 1800 B/B= 6957 C/B= 13866

GROUND BUS / GROUND WIRE (G)

PANEL: NEW L-4
LOCATION: EAST WALL
FEEDER SOURCE: CLECO METER BANK

208/120V, 200A 3Ø, 4W
SURFACE MOUNTED W/EQUIPMENT GND BAR

CKT NO.	THHN WIRE SIZE	LOAD DESCRIPTION LOCATION	BREAKER AMP	BREAKER POLE	LOAD (VA)	A/B B/B C/B	LOAD (VA)	BREAKER POLE	BREAKER AMP	LOAD DESCRIPTION LOCATION	THHN WIRE SIZE	CKT NO.
1 3 5	3 #10 1 #12	OMNI	30	3	2000		2000	2	20	MAN LATHE	2 #12 1 #12	2 4 6
7 9 11	2 #12 1 #12	GFI RECEPTACLE	20	1	1400		2000	3	30	MAN LATHE	2 #10 1 #12	8 10 12
	2 #12 1 #12	GFI RECEPTACLE	20	1	800							
13 15 17	2 #12 1 #12	GFI RECEPTACLE	20	1	1000		800	1	20	GFI RECEPTACLE	2 #12 1 #12	14 16 18
	2 #12 1 #12	GFI RECEPTACLE	20	1	1400		600	1	20	GFI RECEPTACLE	2 #12 1 #12	
	2 #12 1 #12	GFI RECEPTACLE	20	1	600		800	1	20	GFI RECEPTACLE	2 #12 1 #12	
19 21 23	3 #10 1 #10	CMM	20	1	2000		800	1	20	GFI RECEPTACLE	2 #12 1 #12	20 22 24
	2 #8 1 #8	COOLING TOWER 480V	30	3	3360		30240	3	40	A/C UNIT COMPRESSOR 480 V, 5 TON	3 #8 1 #8	
25 27 29	3 #8 1 #8	A/C UNIT COMPRESSOR 480 V, 5 TON	40	3	30240		500	1	20	OFFICE AREA LIGHTS	2 #12 1 #12	26 28 30
							2100	1	30	A/C FAN MOTOR	-	
							2100	1	30	A/C FAN MOTOR	-	
31	-	SPARE	20	1	-		2100	1	30	A/C FAN MOTOR	-	32
33	-	SPARE	20	1	-		2100	1	30	A/C FAN MOTOR	-	34
35	-	SPARE	20	1	-		1000 1000	2	30	WATER HEATER 15 GAL	#10	36 38
37		SPACE										
39		SPACE								SPACE		40
41		SPACE								SPACE		42

SOLID NEUTRAL / NEUTRAL WIRE (W)

TOTAL CONNECTED LOAD (VA): A/B= 29914 B/B= 29914 C/B= 29914

GROUND BUS / GROUND WIRE (G)

PANEL: EXISTING MDP-2
LOCATION: -
FEEDER SOURCE: CLECO METER BANK

VOLTAGE: 277/480V, 2500A 3Ø, 4W
ENCLOSURE: SURFACE MOUNTED W/EQUIPMENT GND BAR
SWITCHBOARD W/GFI PROTECTED MAIN BRK

CKT NO.	THHN WIRE SIZE	LOAD DESCRIPTION LOCATION	BREAKER AMP	BREAKER POLE	LOAD (VA)	A/B B/B C/B	LOAD (VA)	BREAKER POLE	BREAKER AMP	LOAD DESCRIPTION LOCATION	THHN WIRE SIZE	CKT NO.
1 3 5	3/0	2 HYD. PUMP	200	3	168000		169000	3	200	ENV. CHAMBER	3/0	2 4 6
7 9 11	3/0	2 HYD. PUMP	200	3	168000		336000	3	400	SHAKER	500 MCM	8 10 12
13 15 17	#3	HYD. PUMP	100	3	84000		169000	3	200	HYD. PUMP	3/0	14 16 18
19 21 23	3/0	NEW HORIZONTAL	200	3	168000		168000	3	200	FUTURE A/C EQUIP.	3/0	20 22 24
25 27 29	3/0	TOYODO	200	3	168000		169000	3	200	MITSUL	3/0	26 28 30
31 33 35	#3	NEW LATHE	100	3	84000		292480	3	400	PANEL "P-1"	500 MCM	32 34 36
37 39 41	-	SPACE	-	-	-		-	-	-	SPACE	-	38 40 42

SOLID NEUTRAL / NEUTRAL WIRE (W)

TOTAL CONNECTED LOAD (VA): A/B= 713493 B/B= 713493 C/B= 713493

GROUND BUS / GROUND WIRE (G)

PANEL: EXISTING PNL-L3
LOCATION: -
FEEDER SOURCE: MDP-1

VOLTAGE: 120/208V, 200A 3Ø, 3W
ENCLOSURE: SURFACE MOUNTED W/EQUIPMENT GND BAR

CKT NO.	THHN WIRE SIZE	LOAD DESCRIPTION LOCATION	BREAKER AMP	BREAKER POLE	LOAD (VA)	A/B B/B C/B	LOAD (VA)	BREAKER POLE	BREAKER AMP	LOAD DESCRIPTION LOCATION	THHN WIRE SIZE	CKT NO.
1	#10	CMM	30	1	-		-	1	20	SPARE	#12	2
3 5	#12	BANDSAW	20	2	4160		4160	2	20	SURFACE GRINDER	#12	4 6
7 9	#8	WELDER	50	2	4160		4160	2	20	I.D. GRINDER	#12	8 10
11 13	#10	SAW	30	2	9240		7280	3	20	KNEEMILL	#12	12 14
15	#12	SPARE	20	1	1800							16
17	#12	SPARE	20	1	1800		7280	2	20	KNEEMILL	#12	18
19	#12	SPARE	20	1	1800							20
21	#12	SPARE	20	1	1800		1800	1	20	SPARE	#12	22
23	#12	SPARE	20	1	1800		1800	1	20	SPARE	#12	24
25	#12	SPARE	20	1	1800		1800	1	20	SPARE	#12	26
27	#12	SPARE	20	1	1800		1800	1	20	SPARE	#12	28
29	-	SPACE		-	-		1800	1	20	SPARE	#12	30
31	-	SPACE		-	-		1800	1	20	SPARE	#12	32
33	-	SPACE		-	-		1800	1	20	SPARE	#12	34
35	-	SPACE		-	-		-	-	-	SPACE	-	36
37	-	SPACE		-	-		-	-	-	SPACE	-	38
39	-	SPACE		-	-		-	-	-	SPACE	-	40
41	-	SPACE		-	-		-	-	-	SPACE	-	42

SOLID NEUTRAL / NEUTRAL WIRE (W)

TOTAL CONNECTED LOAD (VA): A/B= 8800 B/B= 11986 C/B= 11746

GROUND BUS / GROUND WIRE (G)

PANEL: EXISTING PNL-P1
LOCATION: -
FEEDER SOURCE: MDP-2

VOLTAGE: 277/480V, 400A 3Ø, 4W
ENCLOSURE: SURFACE MOUNTED W/EQUIPMENT GND BAR

CKT NO.	THHN WIRE SIZE	LOAD DESCRIPTION LOCATION	BREAKER AMP	BREAKER POLE	LOAD (VA)	A/B B/B C/B	LOAD (VA)	BREAKER POLE	BREAKER AMP	LOAD DESCRIPTION LOCATION	THHN WIRE SIZE	CKT NO.
1 3 5	#10	TOOL GRINDER	30	3	25200		33600	3	40	O.D. GRINDER	#8	2 4 6
7 9 11	#10	HYD. TEST STAND	30	3	25200		58800	3	70	AIR COMPRESSOR	#4	8 10 12
13							1800	1	20	LIGHTING	#12	14
15 17	#10	HYD. TEST STAND	30	3	25200		16800	3	20	A/C 1 5 TON	#12	16 18
19	#12	LIGHTING	20	1	1800							20
21	#12	LIGHTING	20	1	2200							22
23	#12	LIGHTING	20	1	1800		16800	3	20	A/C 2 5 TON	#12	24
25	#12	LIGHTING	20	1	1800							26
27	#12	LIGHTING	20	1	1800							28
29	#12	LIGHTING	20	1	1800		16800	3	20	A/C 3 5 TON	#12	30
31	#12	HOAL BLOWER	20	1	1800							32
33	#12	HOAL BLOWER	20	1	1800							34
35	#12	HOAL BLOWER	20	1	1800		30240	3	40	A/C UNIT COMPRESSOR 480 V, 5 TON	3 #8 1 #8	36
37 39 41	3 #8 1 #8	A/C UNIT COMPRESSOR 480 V, 5 TON	40	3	30240							38
							-	1	20	SPARE	-	40
							-	1	20	SPARE	-	42

SOLID NEUTRAL / NEUTRAL WIRE (W)

TOTAL CONNECTED LOAD (VA): A/B= 100160 B/B= 93160 C/B= 98360

GROUND BUS / GROUND WIRE (G)

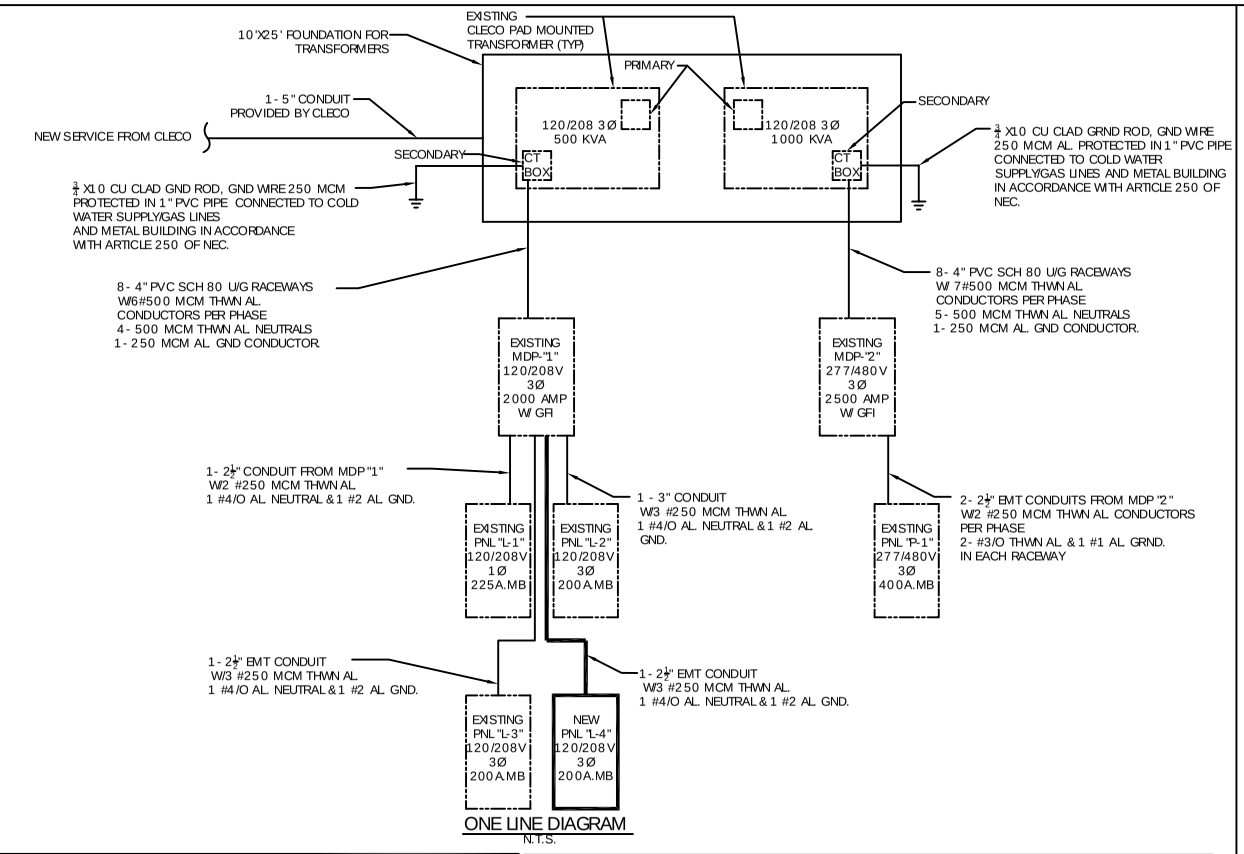

ONE LINE DIAGRAM
N.T.S.

ELECTRICAL NOTES

1. ALL WORK SHALL CONFORM TO THE LATEST EDITION OF THE NATIONAL ELECTRICAL CODE, THE GOVERNING ELECTRICAL CODE AND ALL OTHER INSPECTION DEPARTMENTS HAVING JURISDICTION. OBTAIN CERTIFICATES OR APPROVAL WHERE REQUIRED.
2. ALL MATERIALS FURNISHED SHALL BE NEW AND SHALL BE U.L. LISTED.
3. THE DRAWINGS INDICATE SIZE AND GENERAL LOCATION OF WORK. SCALE DIMENSIONS SHALL NOT BE USED. THE EXACT LOCATION AND LOCATION OF ALL LIGHTING FIXTURES, RECEPTACLES AND TELEPHONE OUTLETS, ETC. SHALL BE DETERMINED BY ACTUAL CONDITIONS IN THE FIELD.
4. PRIOR TO BIDDING, CONTRACTOR SHALL VISIT THE JOB SITE AND FAMILIARIZE THEMSELVES WITH THE EXISTING CONDITIONS.
5. ELECTRICAL CONTRACTOR SHALL COORDINATE HIS WORK WITH OTHER TRADES AND WITH OTHER CONTRACTORS WHOSE WORK MAY AFFECT THIS INSTALLATION.
6. ELECTRICAL CONTRACTOR SHALL COORDINATE INCOMING ELECTRICAL SERVICE WITH UTILITY COMPANY AND INCLUDE IN HIS BID ALL CHARGES AND FEES INCURRED IN MODIFICATIONS.
7. WHERE MORE THAN ONE SWITCH OCCURS IN THE SAME LOCATION, THEY SHALL BE INSTALLED IN A GANG TYPE BOX UNDER ONE COVER PLATE.
8. ELECTRICAL CONTRACTOR SHALL COORDINATE THE TELEPHONE INSTALLATION WITH THE TELEPHONE COMPANY AND THE GENERAL CONTRACTOR.
9. ELECTRICAL CONTRACTOR, BEFORE INSTALLING ANY OF THE WORK, SHALL SEE THAT IT DOES NOT INTERFERE WITH CLEARANCES REQUIRED FOR FINISHED COLUMNS, HUNG CEILINGS, PLASTER, PARTITIONS, WALLS, ETC. AS SHOWN IN THE ARCHITECTURAL DRAWINGS AND DETAILS. IF ANY WORK IS INSTALLED AND IT LATER DEVELOPS THAT SUCH DETAILS OR DESIGN CANNOT BE FOLLOWED, THE CONTRACTOR, AT HIS OWN EXPENSE, SHALL MAKE SUCH CHANGES IN THE WORK AS DIRECTED BY THE ARCHITECT. AS WELL AS TO PERMIT THE INSTALLATION OF THE ARCHITECTURAL WORK AS SHOWN ON THE PLANS AND DETAILS. M-2 MC MAY BE USED FOR LIGHTING WHIPS.
10. PERFORM TEST REQUIRED BY THE OWNER OR THE ENGINEER IN CONNECTION WITH THE OPERATION OF THE ELECTRICAL SYSTEM IN THE BUILDING.
11. ALL TESTS SHALL BE MADE IN ACCORDANCE WITH THE LATEST STANDARD OF THE IEEE AND THE NATIONAL ELECTRICAL CODE
12. MINIMUM CONDUCTOR SIZE SHALL BE #12, 600V INSULATION. MINIMUM SIZE CONDUIT SHALL BE ¾" EMT FOR INTERIOR USE, AND ¾" RIGID ALUMINUM FOR EXTERIOR USE. USE TYPE NMC CABLE COPPER, FOR LIGHTS AND RECEPTACLE CIRCUITS. EXTERIOR FITTINGS SHALL BE CAST BOXES AND COVERS/. INTERIOR FITTINGS SHALL BE CAST WHERE EXPOSED ON WALLS. STAMPED BOXES MAY BE USED ABOVE CEILINGS IN AIR CONDITIONED SPACES.
13. CONTRACTOR SHALL INSTALL WIRING AND OTHER CIRCUIT COMPONENTS TO MATCH EQUIPMENT ACTUALLY INSTALLED.
14. INSTALL GROUND FAULT RECEPTACLES AT RECEPTACLE LOCATIONS WITHIN 5' OF SINKS OR LAVATORIES, AND AT EXTERIOR LOCATIONS. EXTERIOR RECEPTACLES SHALL ALSO BE WATERPROOF.
15. BONDING AND GROUNDING SHALL BE IN ACCORDANCE WITH NFPA 70:230-63, NFPR 250-23, 250-71 & 250-72.
16. GROUND NEUTRAL IN ACCORDANCE WITH NFPA 70:250-23b. GROUND FAULT PROTECTION OF EQUIPMENT SHALL BE PROVIDED PER ARTICLE 230.95. PER N.E.C.
17. FUSES SHALL BE ITT CLASS K5, 250 VOLT, 200,000 AMP INTERRUPTING CAP.
18. PROVIDE SERVICES OF A FIRE/SMOKE DETECTION AND ALARM COMPANY TO DESIGN AND INSTALL ALARM SYSTEM TO MEET REQUIREMENTS OF THE STATE FIRE MARSHALL.
19. EXTERIOR LIGHTING SHALL BE SHADED OR INWARDLY DIRECTED IN SUCH A MANNER SO THAT NO DIRECT LIGHTING OR GLARE IS CAST BEYOND THE PROPERTY LINE. THE INTENSITY OF SUCH LIGHTING SHALL NOT EXCEED ONE FOOT CANDLE AS MEASURED AT THE ABUTTING PROPERTY LINE.
20. ALL ELECTRICAL, MECHANICAL AND PLUMBING PENETRATING FIRE PARTITIONS SHALL BE FIRE CAULKED. (PENETRATIONS THROUGH RATED CONSTRUCTION SHALL BE SEALED WITH A MATERIAL CAPABLE OF PREVENTING THE PASSAGE OF FLAMES AND HOT GASES WHEN TESTED IN ACCORDANCE WITH ASTM-E814.)

DAMMON ENGINEERING, INC.

CHIEF ENGINEER
EMMETT DAMMON, P.E.

CHIEF ARCHITECT
ROBERT WILTSE

1095 FLORIDA AVENUE
SLIDELL, LA. 70458
OFFICE: 985-649-5832
FAX: 985-641-5950

WEBSITE:
WWW.DAMMONENGINEERING.COM

EMAIL:
DAMMONENG@BELLSOUTH.NET

ARCHITECTURE

ENGINEERING

STUDIES

PLANNING

INVESTIGATION

EXPERT WITNESS

WINDWARD, INC.
37362
BROWNSVILLAGE RD.
SLIDELL, LA 70460

PANELS AND ONE LINE DIAGRAM

REV:

SCALE: AS NOTED

JOB#:1934A

DATE: 07-18-08

SHEET 10

E-3

OF 11