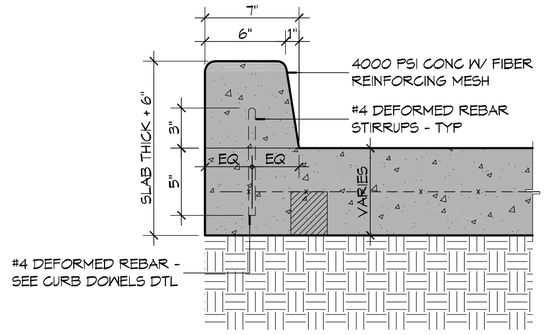

5 DETAIL
SCALE: 1 1/2" = 1'-0"
DESCRIPTION

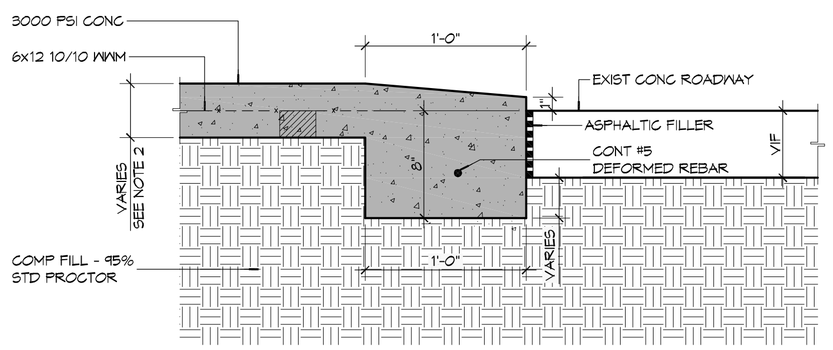

4 DETAIL
SCALE: 1 1/2" = 1'-0"
DESCRIPTION

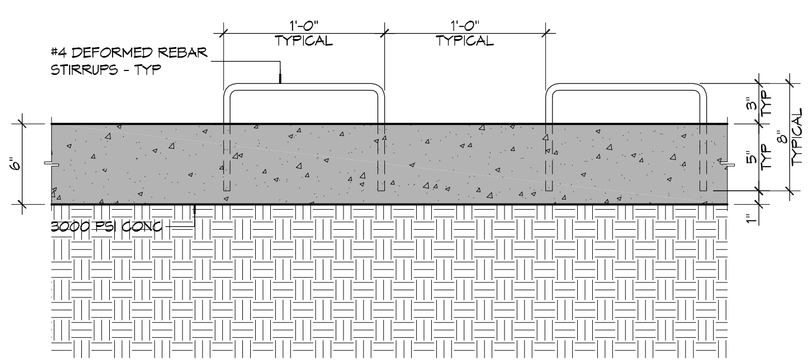

3 DETAIL
SCALE: 1 1/2" = 1'-0"
DESCRIPTION

6" MTL KEYWAY JOINT SYSTEM NOTE:
LONGITUDINAL JOINTS: No.5 DEFORMED
DOWEL ROD 24" L @ 24" O.C.
TRANSVERSE JOINTS: No.5 SMOOTH
DOWEL ROD 24" L @ 24" O.C.

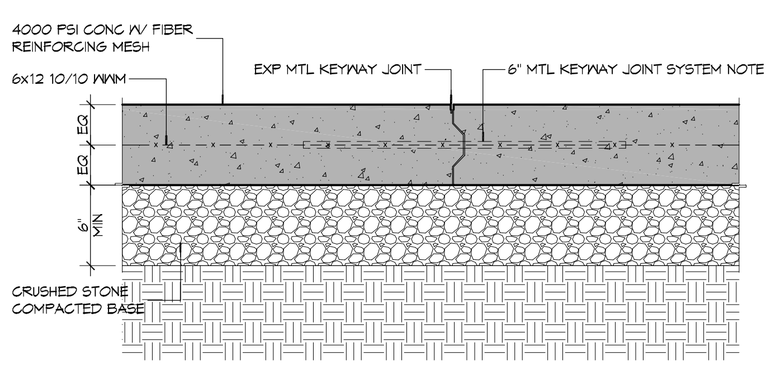

2 DETAIL
SCALE: 1 1/2" = 1'-0"
DESCRIPTION

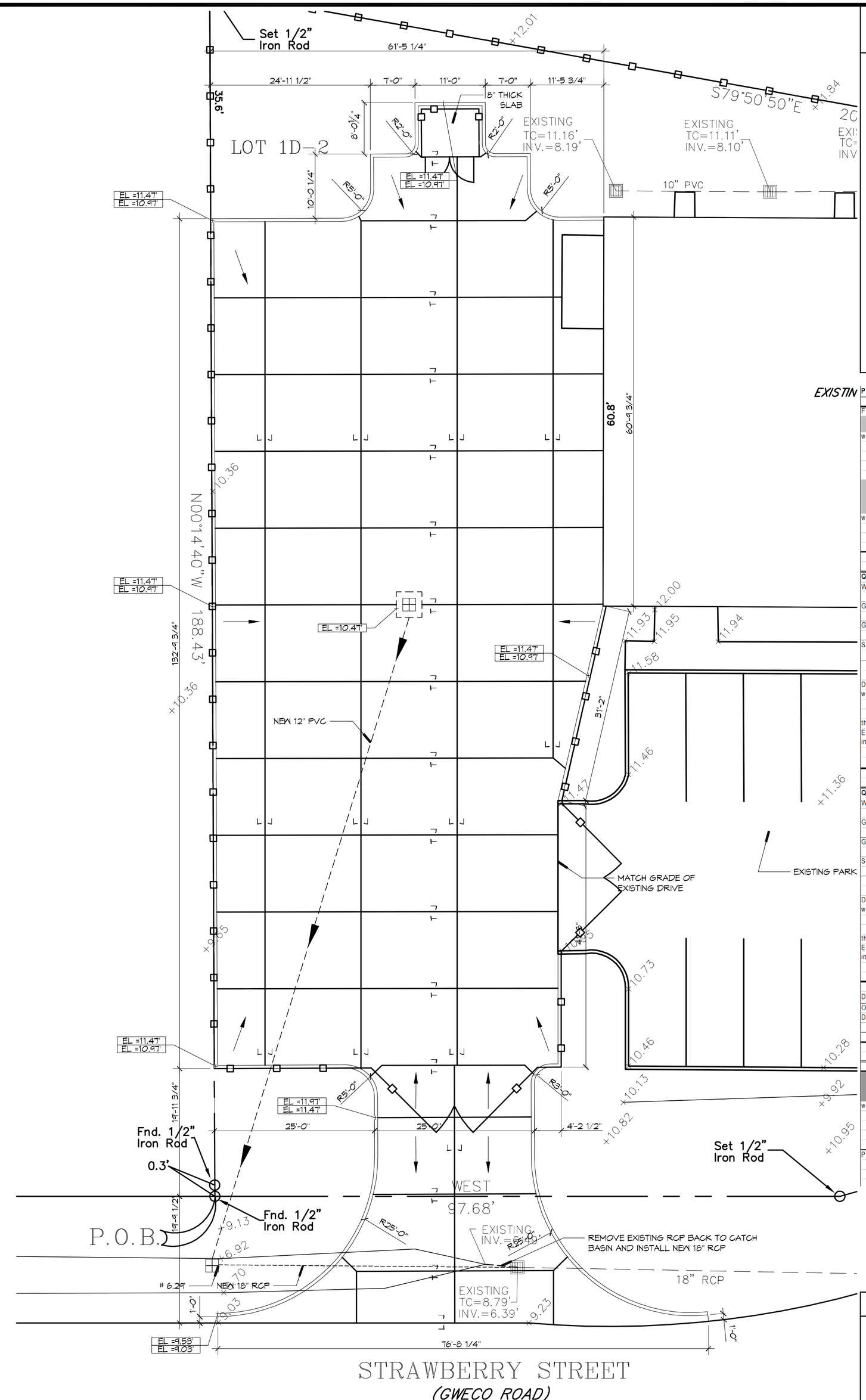

1 PAVING PLAN
SCALE: 1" = 10'
Subtitle

GENERAL PAVING NOTES

1. ALL NEW CONCRETE SHALL SHALL HAVE A MINIMUM COMPRESSIVE STRENGTH OF 4,000 PSI AT 28 DAYS AND A MINIMUM THICKNESS OF 6". CONCRETE MIX SHALL BE IN ACCORDANCE WITH THE LATEST REVISION OF ASTM C-150 TYPE 1.
2. CONCRETE PAVING THICKNESS SHALL VARY AS FOLLOWS:
   a. APRONS & LOADING AREAS = 8" THICKNESS
   b. DRIVE LANES & PARKING AREAS = 6" THICKNESS
3. ALL REINFORCING STEEL SHALL MEET ASTM-A615 (GRADE 60).
4. ALL REINFORCING STEEL SHALL BE SECURELY SUPPORTED TO PREVENT BOTH VERTICAL AND HORIZONTAL MOVEMENT DURING CONCRETE PLACEMENT. ALL CONTROL AND EXPANSION JOINTS SHALL BE LOCATED AND INSTALLED AS SHOWN ON THE PAVING PLAN AND IN ACCORDANCE WITH THE MANUFACTURER'S RECOMMENDATIONS.
5. ALL SUB GRADE FILL SHALL BE SELECT GRANULAR MATERIAL COMPACTED TO 95% STANDARD PROCTOR DENSITY IN A MAXIMUM OF 6" LIFTS.
6. CONTRACTOR SHALL CONTACT THEIR REGULATORY DEPARTMENT OF ENGINEERING PRIOR TO CONDUCTING ANY WORK.
7. ANY WORK WITHIN THE ROADWAY OR ADJACENT TO THE ROADWAY CAUSING AN INTERFERENCE TO VEHICULAR TRAFFIC REQUIRES PRIOR APPROVAL FROM THE CITY TRAFFIC ENGINEERING DIVISION, AND MUST CONFORM TO THE REQUIREMENTS SET FORTH BY THE UNIFORM MANUAL OF TRAFFIC CONTROL DEVICES OF THE STATE OF LOUISIANA. THE CONTRACTOR MUST FURNISH ALL NECESSARY TRAFFIC SIGNS AND/OR BARRICADES AND MAINTAIN THEM DURING CONSTRUCTION ACTIVITY.

EXISTIN

PROJECT: KBR

STORMWATER RUN-OFF CALCULATIONS

Formulas used:

[1] RATIONAL METHOD: Q=Aci

where: Q= Peak discharge of watershed in cubic feet per second (cfs) due to maximum stor assumed.
A= Area of watershed in acres.
c= Coefficient of run-off [2].
i= Intensity of rainfall in inches per hour based on concentration time. [3]

[4] $TC = \frac{\left(L^{0.8}\left(\frac{1000}{S}-9\right)^{0.7}\right)}{(1140s^{0.5})}$

where: TC= Time of concentration= time required for rain falling at most remote point to reach discharge point.
c= Site run-off coefficient based on conditions shown.
s= Percent slope of overland flow.

PRIOR DEVELOPMENT
25 Year Frequency

Q_1 = Aci						
Watertight Surfaces			8974	sqft =	0.206	Acres
c(1) =	0.9					
Gravel Surface			0	sqft =	0.000	Acres
c(2) =	0.25					
Green Space			21258	sqft =	0.488	Acres
c(3) =	0.15					
Summary			30232	sqft =	0.694	Acres
c =	0.37					
Duration (D) = Time of concentration (TC)						
where	L =	196	run-off length ft		Elev diff =	1
	c =	0.37	run-off coef			
	S =	0.5102	percent slope			
therefore	TC = D =	10.71	minutes			
Expected rainfall intensity	i =	3.64	in/hr			
Q_1 =	0.941	cfs		10% reduction	0.094	cfs

POST DEVELOPMENT
25 Year Frequency

Q_2 = Aci						
Watertight Surfaces			26445	sqft =	0.607	Acres
c(1) =	0.9					
Gravel Surface			0	sqft =	0.000	Acres
c(2) =	0.25					
Green Space			3787	sqft =	0.087	Acres
c(3) =	0.15					
Summary			30232	sqft =	0.694	Acres
c =	0.81					
Duration (D) = Time of concentration (TC)						
where	L =	192	run-off length ft		Elev diff =	1.5
	c =	0.81	run-off coef			
	S =	1.1364	percent slope			
therefore	TC = D =	6.77	minutes			
Expected rainfall intensity	i =	3.64	in/hr			
Q_2 =	2.036	cfs				

DETENTION REQUIREMENTS

Detention required Q_2-Q_1	1.09	cfs		
ONE HOUR DETENTION	3941.8	cuft		
DETENTION DIMENSIONS		WIDTH	53	feet
		LENGTH	132	feet
		DEPTH	0.56	feet

DISCHARGE END AREA REQUIREMENTS
10 Year Frequency

[5] $A = \frac{Q}{(c\sqrt{(2gh)})}$

where: A= Discharge Area required
g= Acceleration of gravity
c= Discharge coefficient
h= Hydraulic head
Q= Flow volume from run-off

Pipe Servicing Site Drainage

Q =	0.094	cfs	h =	2.50	feet
c =	0.62	coefficient	A =	0.012	sqft
g =	32.16	ft/sec/sec			

SITE LEGEND

- PROPERTY LINE
- EL =11.4' / EL =10.9' — NEW ELEVATIONS
- ×00.00 — EXISTING ELEVATIONS
- DRAINAGE FLOW ARROWS

DAMMON ENGINEERING, INC.
Architects & Engineers
www.dammonengineering.com
info@dammonengineering.com
PH: 985.643.5232
F: 985.641.5950
Chief Architect: Kevin J. Kinchen, NCARB
Chief Engineer: Brian Mistich, PE
5500 Groves Trail
Slidell, LA 70458

REVISIONS

#	DESCRIPTION	DATE

SEAL:

PRELIMINARY NOT FOR CONSTRUCTION

OFFICE BUILDOUT FOR
KBR ENTERPRISES
116 STRAWBERRY STREET
SLIDELL, LOUISIANA 70460

JOB No: 22221 DATE: 01-07-15
DRAWN BY: CKD/KJK CHECKED BY: CKD

This plans, specs and data furnished by Dammon Engineering are instruments of service and shall remain the property of Dammon Engineering. All re-use rights are reserved. Only one (1) set of plans may be used for one (1) project. Re-use of these plans for other projects or extensions to this project are prohibited without written consent of Dammon Engineering. Dammon Engineering shall not be responsible for any re-use of these plans for other projects in whole or in part.

SHEET TITLE:
SITE PAVING PLAN & DETAILS

DRAWING NUMBER:
C102

SHEET No: 00 of #