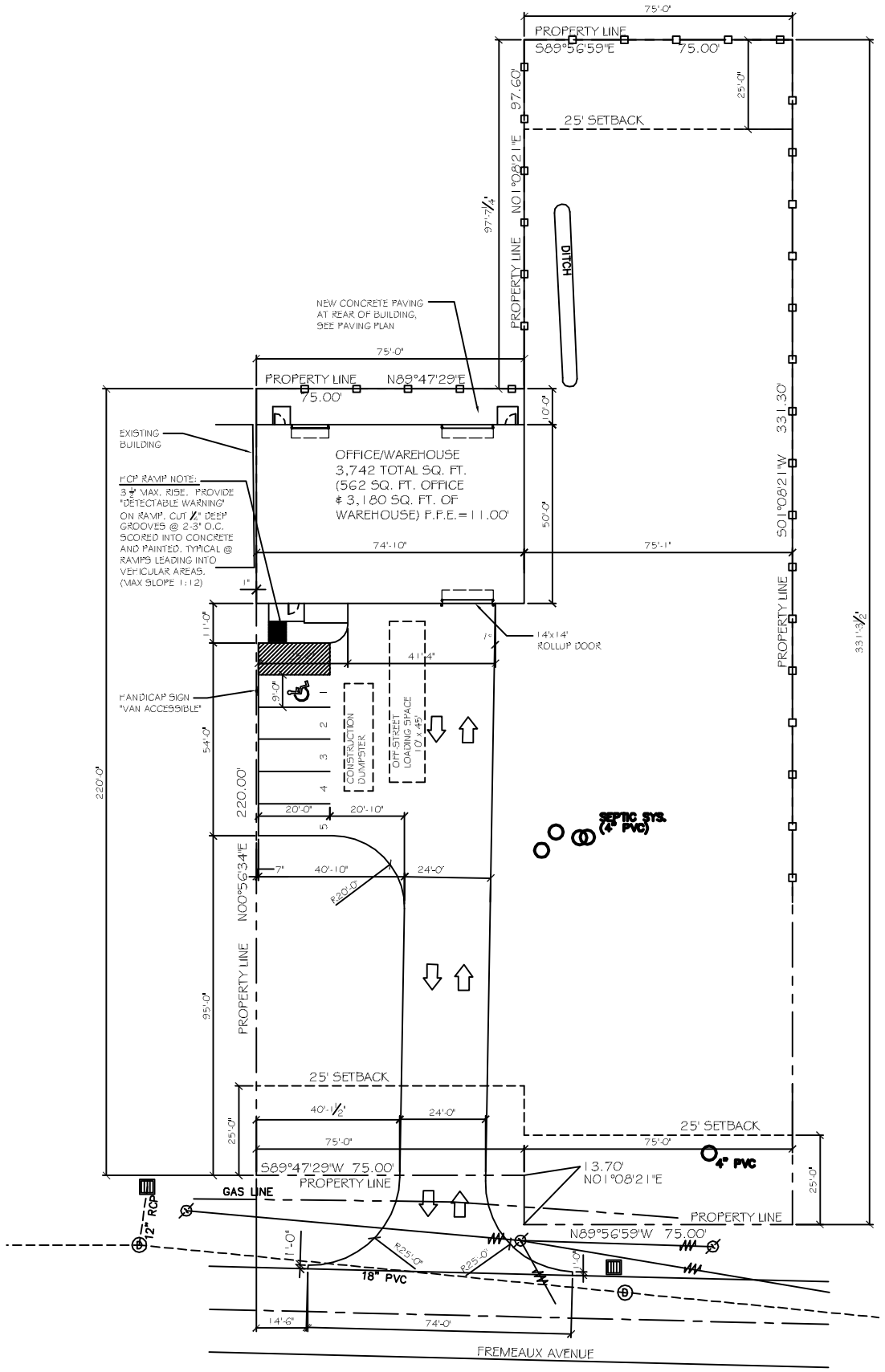

SITE PLAN
SCALE: 1"=20'-0"

LEGEND

- PROPERTY LINE
- SETBACK LINE
- NEW BUILDING
- PARKING
- 6' OPAQUE FENCE
- HCP - HANDICAP PARKING
- HANDICAP PARKING SIGN

OFFICE WAREHOUSE PARKING REQUIREMENTS

OFFICE - 1 PER TWO HUNDRED SQUARE FT. = 3
WAREHOUSE - 1 PER 5 EMPLOYEES = 1
TOTAL PARKING REQUIRED = 4 SPACES INCLUDING
1 HANDICAP ACCESSIBLE. TOTAL PROVIDED = 5

NOTE:
ALL CONCRETE PAVEMENT SHALL BE 5" THICK CONCRETE EXCEPT FROM PROPERTY LINE TO STREET SHALL BE 6" THICK CONCRETE.

SITE PLAN NOTES

1. ROOFING MATERIAL: METAL ROOFING PANEL
2. SIDING MATERIAL: METAL PANELS & CMU
3. UTILITIES: ALL UTILITIES SHALL BE PLACED UNDERGROUND

NOTE:
SIGNAGE SHALL COMPLY
WITH SIGNAGE GUIDELINES

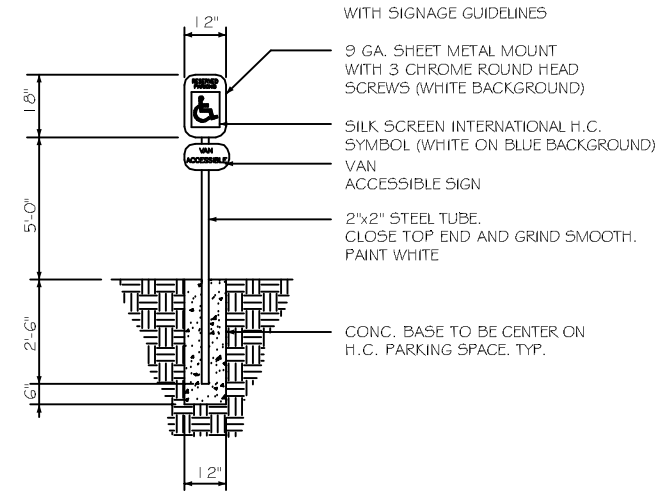

HANDICAP PARKING SIGN
N. T. S.

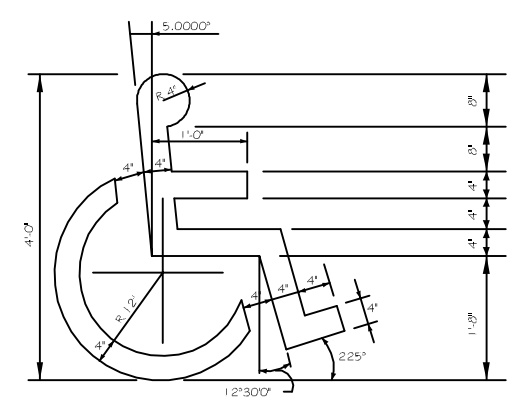

HANDICAP SYMBOL DETAIL
N. T. S.

SITE LIGHTING

EXTERIOR LIGHTING SHALL BE SHADED OR INWARDLY DIRECTED IN SUCH A MANNER SO THAT NO DIRECT LIGHTING OR GLARE BE CAST BEYOND THE PROPERTY LINE. THE INTENSITY OF SUCH LIGHTING SHALL NOT EXCEED ONE FOOT CANDLE AS MEASURED AT THE ABUTTING PROPERTY LINE. (N/A FOR THIS PARTICULAR JOB)

DAMMON ENGINEERING, INC.
Architects & Engineers
dammoneng@eltoca.tv.net
PHONE: 985-649-5952
FAX: 985-649-5950
CHIEF ENGINEER: EMMETT DAMMON, P.E.
CHIEF ARCHITECT: KEVIN NINCHEN
554 OLD SPANISH TRAIL
SLIDELL, LA 70458

These drawings and specifications are the property and copyright property of Dammon Engineering, Architects & Engineers and shall not be used for any purpose other than the specified project without the written consent of Dammon Engineering, Architects & Engineers.

BULK SYSTEMS NEW OFFICE/WAREHOUSE BUILDING
1226 FREMEAUX AVENUE
SLIDELL, LOUISIANA 70458

JOB No: 2173	DATE: 04-22-2013
DRAWN BY: JTL	CHECKED BY:

#	DESCRIPTION	DATE
REVISIONS		

SITE PLAN

SHEET No: 3 OF 20

C2