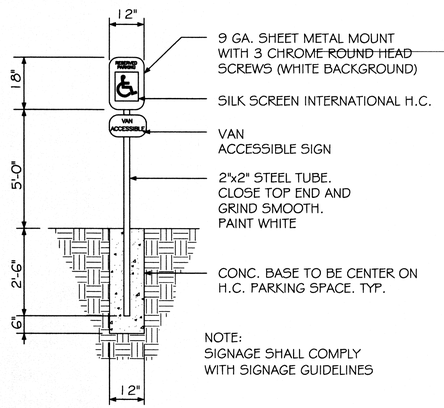

HANDICAP PARKING SIGN

N. T. S.

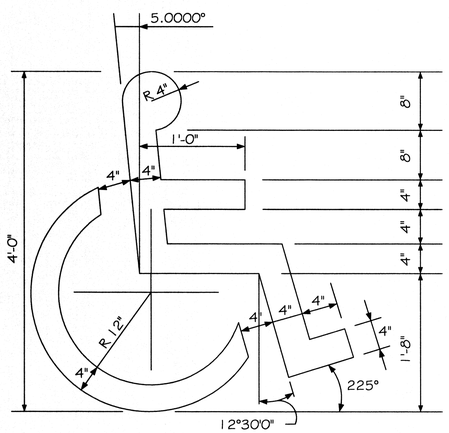

HANDICAP SYMBOL DETAIL

N. T. S.

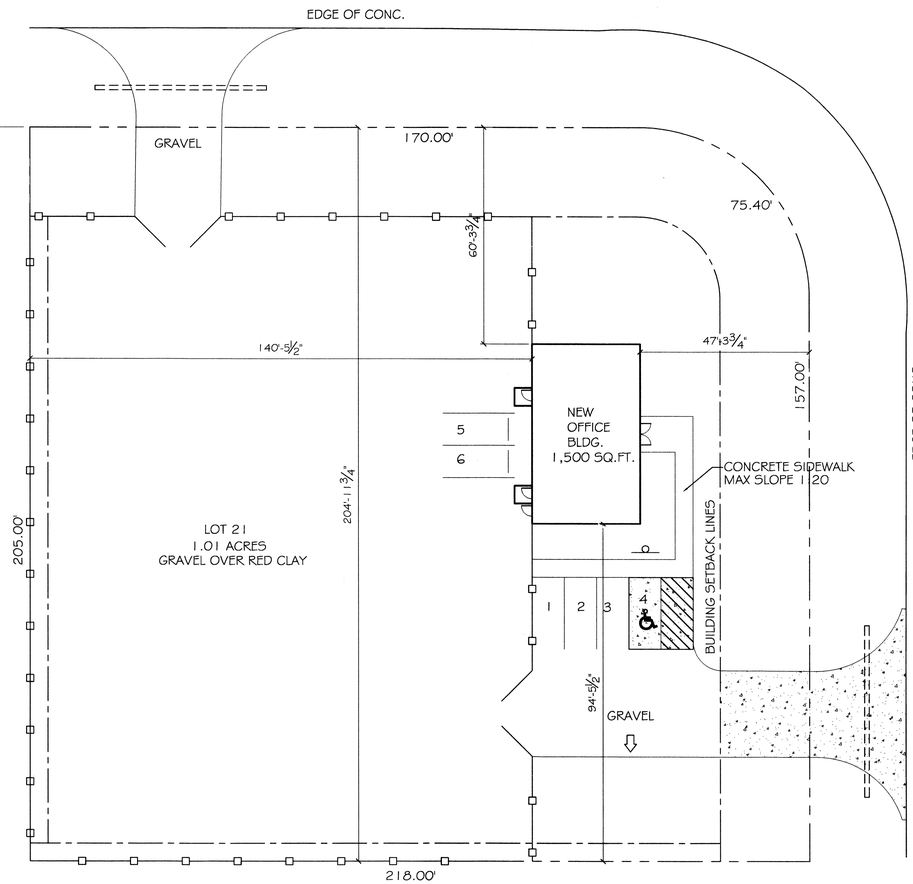

SITE PLAN

SCALE: 1"=20'

#400 LEEWARD LOOP

SITE LIGHTING

EXTERIOR LIGHTING SHALL BE SHADED OR INWARDLY DIRECTED IN SUCH A MANNER SO THAT NO DIRECT LIGHTING OR GLARE BE CAST BEYOND THE PROPERTY LINE. THE INTENSITY OF SUCH LIGHTING SHALL NOT EXCEED ONE FOOT CANDLE AS MEASURED AT THE ABUTTING PROPERTY LINE. (N/A FOR THIS PARTICULAR JOB)

SITE PLAN NOTES

1. ROOFING MATERIAL: METAL ROOFING PANEL
2. SIDING MATERIAL: CONVENTIONAL STUCCO VENEER & METAL PANELS.
3. UTILITIES: ALL UTILITIES SHALL BE PLACED UNDERGROUND

OFFICE/WAREHOUSE PARKING REQUIREMENTS

1 SPACE PER EACH 700 SQ.FT. OF STORAGE AREA PLUS 1 SPACE PER EACH 400 SQ.FT. OF OFFICE, SALES OR OTHER SPACE TO BE USED BY VISTORS, CUSTOMERS OR SALESMEN.

1,500 SQ. FT. BUILDING TOTAL
WAREHOUSE = 2 PARKING SPACES
1,500 SQ. FT. OF SALES =4 PARKING SPACES
TOTAL PARKING PROVIDED = 6

SITE LEGEND

- PROPERTY LINE
- BUILDING SETBACK MINIMUM
- HANDICAP PARKING
- HANDICAP PARKING SIGN
- 8' HIGH WOOD FENCE

DAMMON ENGINEERING INC
Architects & Engineers
CHIEF ENGINEER: EMMETT DAMMON, P.E.
CHIEF ARCHITECT: KEVIN KINCHEN
554 OLD SPANISH TRAIL
SLIDELL, LA 70458
dammoneng@bellsouth.net
PHONE: 985-649-5832
FAX: 985-641-5953

LANDIS TRANSPORT LLC OFFICE/WAREHOUSE BUILDING

LOT 21 1.01 #400 LEEWARD LOOP
STT. AMMANT PARISH COVINGTON LOUISIANA

JOB No:	2164	DATE:	01-30-2013
DRAWN BY:	CD	CHECKED BY:	CD

The signed drawings and specifications, along with all parts thereof, are the property of Dammon Engineering and shall be returned upon request. Any reproduction, in whole or in part, or any use of the drawings or specifications for any purpose other than the specific project for which the plans were prepared, shall be prohibited without the written consent of Dammon Engineering. Prior contact with Dammon Engineering is required for any proposed reproduction or use of these drawings, in accordance with copyright protection of these drawings.

#	DESCRIPTION	DATE

REVISIONS

STATE OF LOUISIANA
EMMETT C. DAMMON, JR.
License No. 23766
PROFESSIONAL ENGINEER

SITE PLAN

SHEET No: 2 OF 9

C1