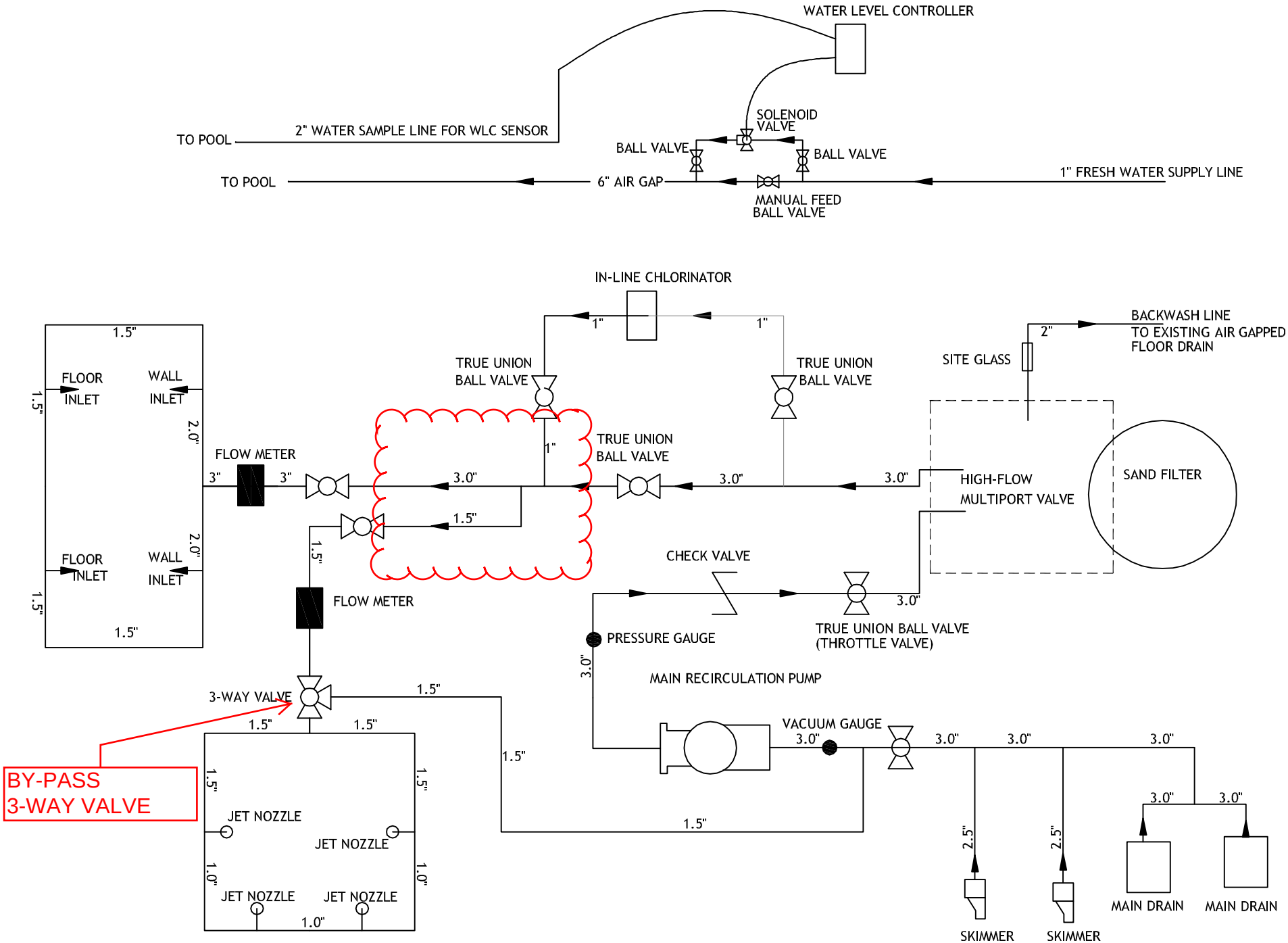

01 PL-1.4

SYSTEM SCHEMATIC

SCALE: NO TO SCALE