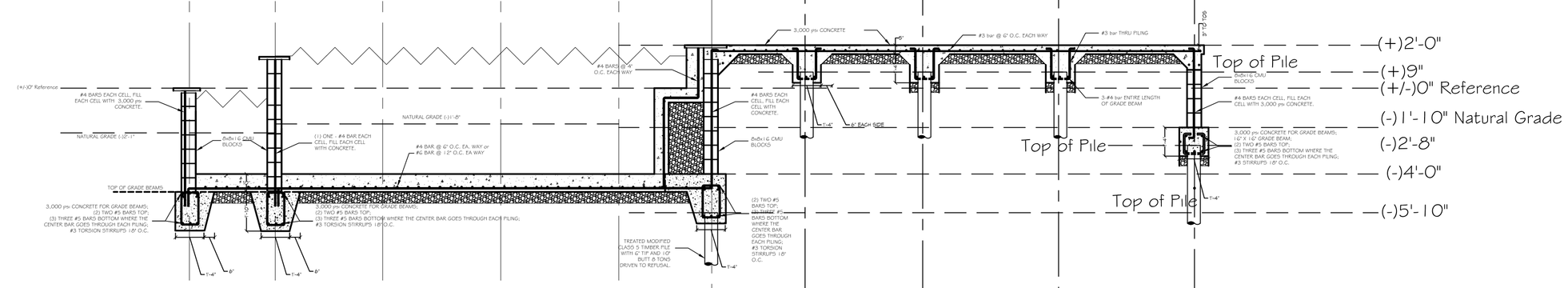

A POOL DETAIL
SCALE: 1/4" = 1'-0"

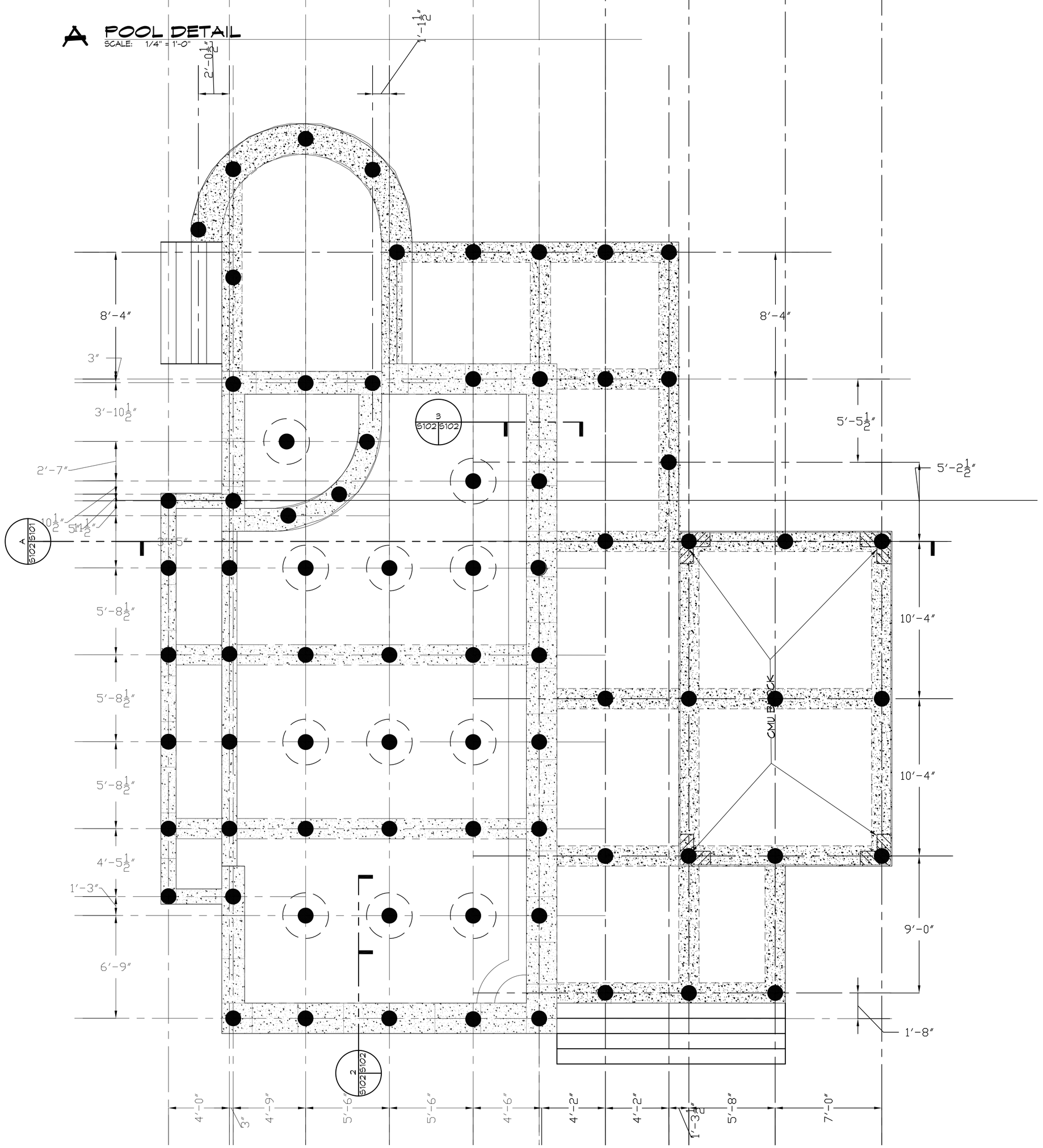

1 POOL & DECK FOUNDATION PLAN
SCALE: 1/4" = 1'-0"

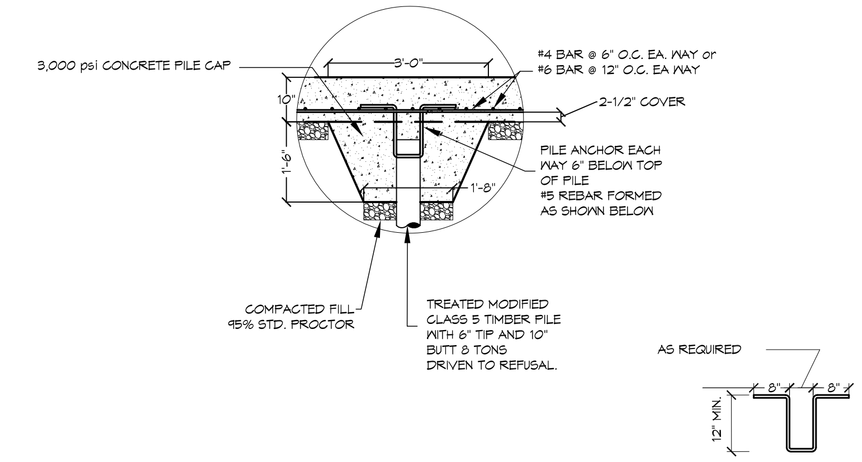

2 POOL INTERMEDIATE PILE DETAIL
SCALE: 1/2" = 1'-0"

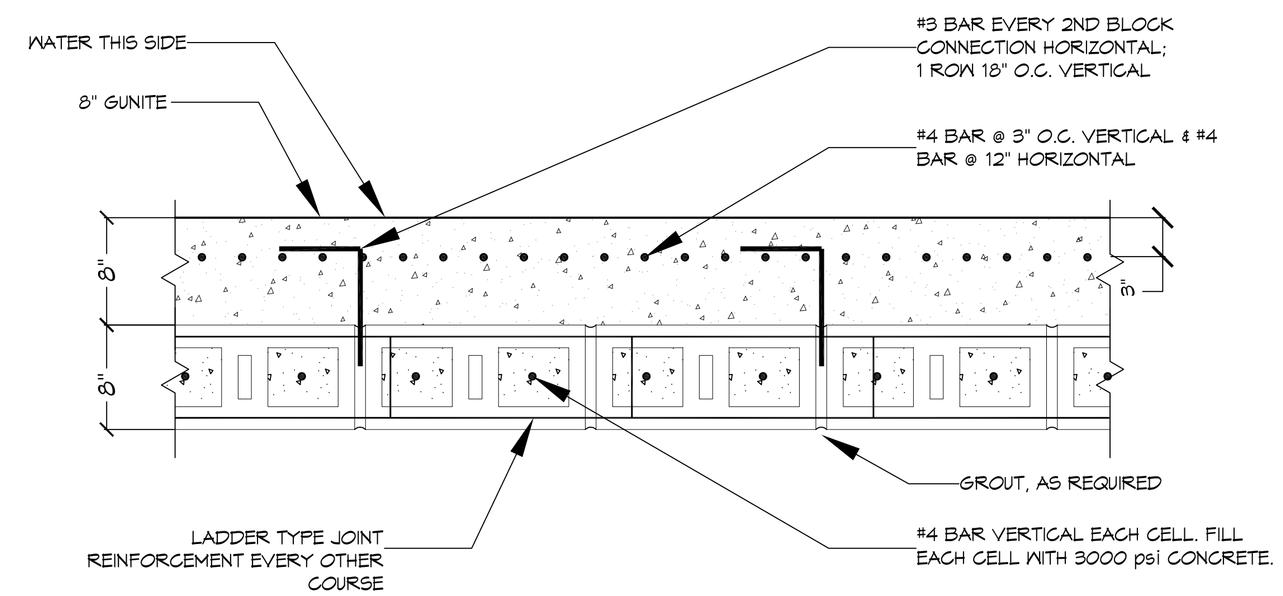

3 POOL WALL PLAN VIEW
SCALE: 1-1/2" = 1'-0"

DAMMON ENGINEERING, INC.
LOUISIANA & MISSISSIPPI
www.dammonengineering.com
info@dammonengineering.com
PH: 985.649.5832
Chief Engineer: Brian Mistich, PE
5540 Crowder Trail
Slidell, LA 70458

#	DESCRIPTION	DATE
	REVISIONS	

SEAL:
STATE OF LOUISIANA
BRIAN A. MISTICH
License No. 30187
4/24/2017
PROFESSIONAL ENGINEER

NEW POOL & PAVILION

Steve & Laura McKinney

Lot C-2, Square A, Phase 2
Rigolets Estates
St. Tammany Parish, LA

JOB No:	2308	DATE:	February 20, 2017
DRAWN BY:	DPP	CHECKED BY:	CKD

THESE PLANS AND SPECIFICATIONS ARE COPYRIGHTED. ONLY THE OWNER SPECIFIED HEREIN MAY USE THESE PLANS AND SPECIFICATIONS. THEY REMAIN THE PROPERTY OF DAMMON ENGINEERING, AND MUST BE RETURNED AND NO COPIES RETAINED IF THE OWNER DOES NOT CONSTRUCT THE PROJECT DESIGNED BY DAMMON ENGINEERING. THEY MAY NOT BE USED BY OTHERS OR FOR OTHER PROJECTS, EXCEPT BY AGREEMENT IN WRITING AND APPROPRIATE COMPENSATION TO DAMMON ENGINEERING.

SHEET TITLE:
POOL AND DECK FOUNDATION PLAN

DRAWING NUMBER:
S102

SHEET No: 2 of 2