PILING NOTES

1. PILES ARE TO BE CLASS 5 PRESSURE TREATED WITH A 6 INCH TIP AND 8" BUTT.
2. ALL PILES SHALL BE DRIVEN TO REFUSAL.
3. CONTRACTOR SHALL DRIVE TEST PILE.
4. NO FIELD SUPERVISION OR INSPECTION PROVIDED UNDER THIS SEAL UNLESS OTHERWISE NOTED.
5. PILE LAYOUT MAY BE MODIFIED DUE TO ACTUAL DRIVING CONDITIONS. ENGINEER TO BE NOTIFIED ON ANY MODIFICATION.
7. A PILE BLOW COUNT LOG OF ALL PILES IS TO BE SUBMITTED TO THE ENGINEER OF RECORD. FAILURE TO SUBMIT SAID LOG WILL RELEASE THE ENGINEER OF ALL RESPONSIBILITY AFTER 5 DAYS OF INSTALLING.

GENERAL NOTES

1. ALL LUMBER SHALL BE PRESSURE TREATED WITH A RETENTION OF .4 PER C.F.
2. ALL FASTENERS SHALL BE HOT DIPPED GALVANIZED (HDG) PER ASTM A153.
3. ALL CONNECTORS SHALL BE HDG PER ASTM A653, CLASS G185 SHEET WITH 1.85 OZ/SF ZING COATING.

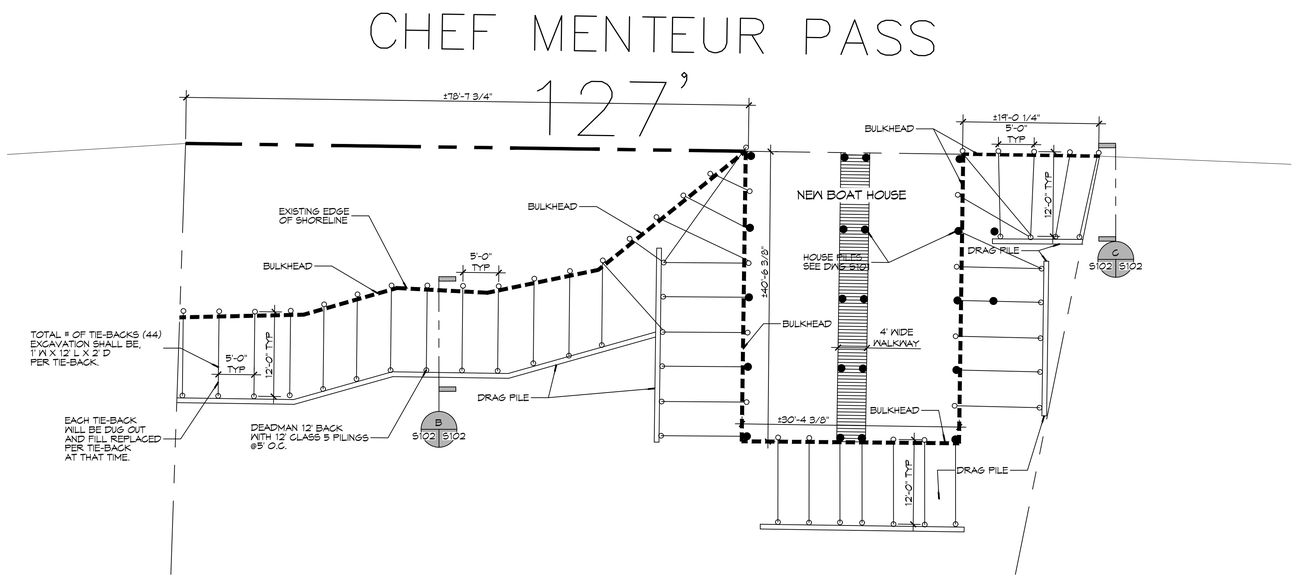

3 BULKHEAD PILING PLAN

SCALE: 1" = 10'

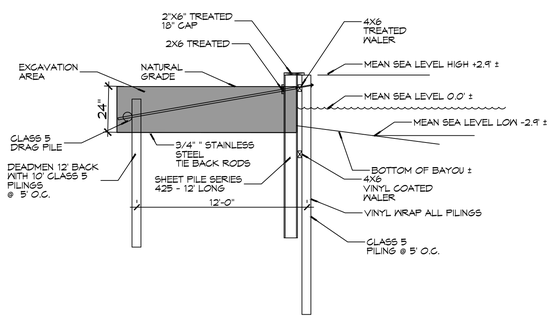

B TYPICAL BULKHEAD SECTION

S102 | S102

SCALE: 3/16" = 1'-0"

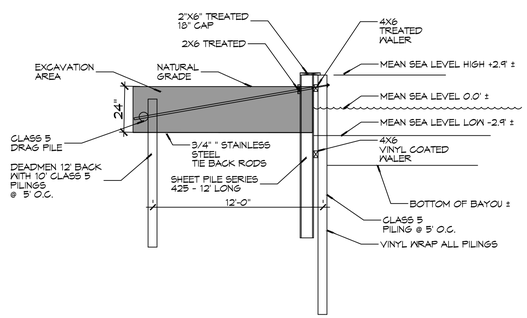

C TYPICAL BULKHEAD SECTION

S102 | S102

SCALE: 3/16" = 1'-0"

GRAPHIC SCALE

(IN FEET)
1 INCH = 1 FEET

DAMMON ENGINEERING, INC.
LOUISIANA & MISSISSIPPI
www.dammonengineering.com
info@dammonengineering.com
PH: 985-649-5333

Chief Engineer: Brian Mistich, PE
5356 Old Spanish Trail
Slidell, LA 70458

#	DESCRIPTION	DATE

REVISIONS

SEAL:

STATE OF LOUISIANA
BRIAN A. MISTICH
License No. 30187
PROFESSIONAL ENGINEER

BOAT HOUSE PLAN

ALBERT CUTITTO

LOT 16
2170 I CHEF MENTEUR HWY
NEW ORLEANS, LOUISIANA 70129

JOB No:	2024
DATE:	09-02-2024
DRAWN BY:	GKD
CHECKED BY:	BAM

THE CONTENTS HEREON ARE THE PROPERTY OF DAMMON ENGINEERING, INC. AND SHALL NOT BE REPRODUCED IN WHOLE OR IN PART WITHOUT PERMISSION OF DAMMON ENGINEERING, INC. ANY REPRODUCTION WITHOUT PERMISSION IS UNLAWFUL. ANY PERSON OR ENTITY MAKING ANY CHANGE TO THIS DOCUMENT WITHOUT THE WRITTEN PERMISSION OF DAMMON ENGINEERING, INC. WILL BE PROSECUTED TO THE FULLEST EXTENT OF THE LAW.

SHEET TITLE:
BULKHEAD PLAN

DRAWING NUMBER:

S102

SHEET No: 4 of 13

FILE NAME: J:\- REDESIGN\Lincoln Cutitto 21781 Chef Hwy\Current Drawings\S102 - Bulkhead Piling Plan.dwg PLOT DATE & TIME: Monday, Nov 13, 2024 1:41:13 PM