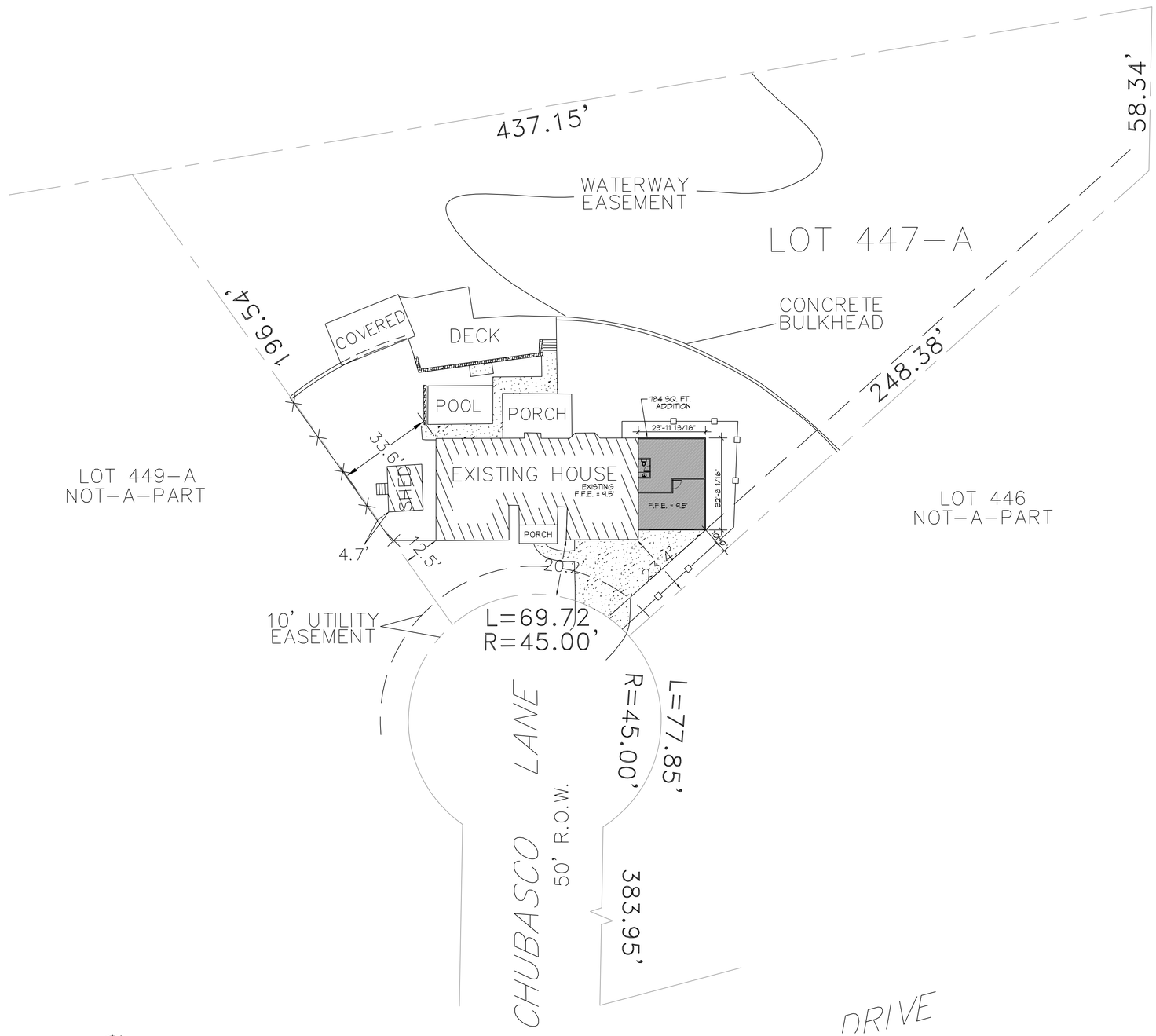

1 SITE PLAN
SCALE: 1"=20'-0"

NEW GARAGE

TOTAL SQUARE FEET = 784

SURVEY LEGAL

LOT 447-A, EDEN ISLES,
UNIT 4
ST. TAMMANY PARISH, LOUISIANA

PLANNING

ZONED - SINGLE FAMILY RESIDENTIAL DISTRICT

FLOOD ZONE

ZONE "AE"

BUILDING ELEVATION

BASE FLOOD ELEVATION = 12.0'
FINISHED FLOOR ELEVATION = 9.5'

MINIMUM AREA REGULATIONS

FRONT SETBACK = 30'-0"
SIDE SETBACK = 10'-0"
REAR SETBACK = 25'-0"

STORMWATER CONTROL LEGEND

SILT FENCE

DESIGN CRITERIA

THE CONSTRUCTION FOR SAID RESIDENCE, WHERE BASIC WIND SPEED IS 130 MILES PER HOUR, WIND EXPOSURE ZONE C, IS DESIGNED IN ACCORDANCE WITH: AMERICAN FOREST AND PAPER ASSOCIATION (AF&PA) WOOD FRAME CONSTRUCTION MANUAL FOR ONE AND TWO FAMILY DWELLINGS (WFCM) 2001 EDITION AS WELL AS THE INTERNATIONAL RESIDENTIAL CODE (IRC) 2015 EDITION

SHEET INDEX

SHEET #	SHEET TITLE
C101	SITE PLAN
S101	FOUNDATION PLAN AND DETAILS
S102	TYPICAL CONNECTION DETAILS, SCHEDULES AND NOTES
A101	FLOOR PLAN & BLDG SECTION
A102	EXTERIOR ELEVATIONS

DAMMON ENGINEERING, INC.
554 Old Spanish Trail
Slidell, LA 70458
PH: 985.649.5832
www.dammonengineering.com
info@dammonengineering.com
Fax: 985.641.5950

REVISIONS

#	DESCRIPTION	DATE

SEAL:
STATE OF LOUISIANA
BRIAN A. MISTICH
License No. 30187
12-17-2020
PROFESSIONAL ENGINEER

NEW GARAGE

ENZO PALLITTA

218 CHUBASCO LANE
SLIDELL LOUISIANA 70458

JOB No:	2020
DATE:	12-17-2020
DRAWN BY:	CKD
CHECKED BY:	CKD

The design, drawings and specifications, original and all subsequent alterations thereto, is and shall remain the property of Dammon Engineering, and no party thereof shall be used for any purpose other than the construction of the project for which they are prepared. Dammon Engineering, Inc. shall not be responsible for any changes made in the plans and specifications without the written consent of Dammon Engineering, Inc. Dammon Engineering, Inc. shall not be responsible for any construction not in accordance with the plans and specifications and approved by Dammon Engineering, Inc.

SHEET TITLE:
SITE PLAN

DRAWING NUMBER:
C100

SHEET No: 1 of # 5

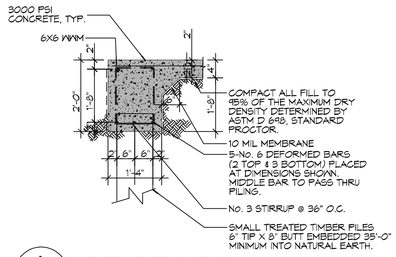

A S101|S101 SECTION
SCALE: 1/2" = 1'-0"

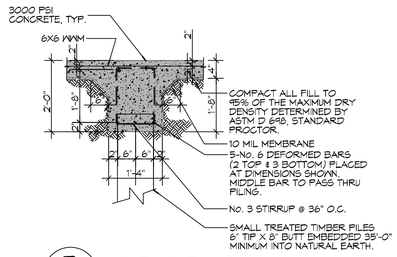

B S101|S101 SECTION
SCALE: 1/2" = 1'-0"

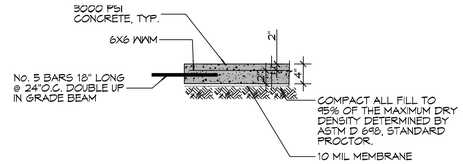

C S101|S101 SECTION
SCALE: 1/2" = 1'-0"

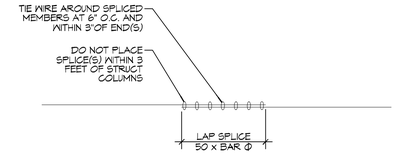

4 S101|S101 DETAIL
SCALE: 1/2" = 1'-0"

FOUNDATION NOTES

1. ALL DIMENSIONS ARE EDGE OF CONCRETE (EOC) TO EDGE OF CONCRETE (EOC) UNLESS NOTED OTHERWISE.
2. VERIFY ALL PLUMBING ROUGH-IN LOCATIONS ON ARCHITECTURAL DWGS.
3. CONCRETE MIX SHALL HAVE A MINIMUM COMPRESSIVE STRENGTH OF 3000 PSI AT 28 DAYS. CONCRETE MIX SHALL BE IN ACCORDANCE WITH ACI-318.
4. ALL CONVENTIONAL REINFORCING STEEL SHALL MEET ASTM-A615 (GRADE 60).
5. ONE LAYER OF POLYETHYLENE VAPOR BARRIER SHALL BE PLACED UNDER ALL CONCRETE. VAPOR RETARDER TO BE MINIMUM .006.
6. ALL REINFORCING STEEL AND MESH SHALL BE SECURELY SUPPORTED TO PREVENT BOTH VERTICAL AND HORIZONTAL MOVEMENT DURING CONCRETE PLACEMENT.
7. THE CONTRACTOR SHALL VERIFY ALL DROPS, OFFSETS, BRICK LEDGES, DIMENSIONS AND CONFIGURATIONS. CONTRACTOR MUST BE RESPONSIBLE FOR SAME.
8. GRADE BEAM DIMENSIONS MAY VARY BY -5%, +20%.
9. REMOVE ANY AND ALL BAD SOIL IN FOOT PRINT AND REPLACE WITH A4 SELECT.
10. ALL SOIL BELOW SLAB SHALL RECEIVE TERMITE TREATMENT.

PILING NOTES

1. ALL PILES SHALL BE PRESSURE-TREATED ROUND TIMBER PILES CONFORMING TO ASTM D25.
2. TREATED CLASS "B" PILE DRIVEN 35' OR REFUSAL & TEST OUT AT A MAXIMUM ALLOWABLE SINGLE LOAD PILE TIP CAPACITY (WITHOUT EMBEDMENT INVESTIGATIONS) AT 5 TONS
3. NO FIELD SUPERVISION OR INSPECTION PROVIDED UNDER THIS SEAL UNLESS OTHERWISE NOTED.
4. PILE LAYOUT MAY BE MODIFIED DUE TO ACTUAL DRIVING CONDITIONS. ENGINEER TO BE NOTIFIED ON ANY MODIFICATION.
5. A PILE BLOW COUNT LOG OF ALL PILES IS TO BE SUBMITTED TO THE ENGINEER OF RECORD. FAILURE TO SUBMIT SAID LOG WILL RELEASE THE ENGINEER OF ALL RESPONSIBILITY.
6. USE DROP HAMMER OR SINGLE ACTING AIR HAMMER DELIVERING 7,500 FT-LBS OF ENERGY PER BLOW, RAM WEIGHT OF DROP HAMMER SHALL NOT EXCEED 2,500 TO 3,000 LBS AND THE DROP SHOULD NOT EXCEED 3 FT., AT MINIMUM OF 25 BLOWS PER FOOT. IF THE DROP EXCEEDS 3 FT., CONTACT ENGINEER FOR INSTRUCTIONS.

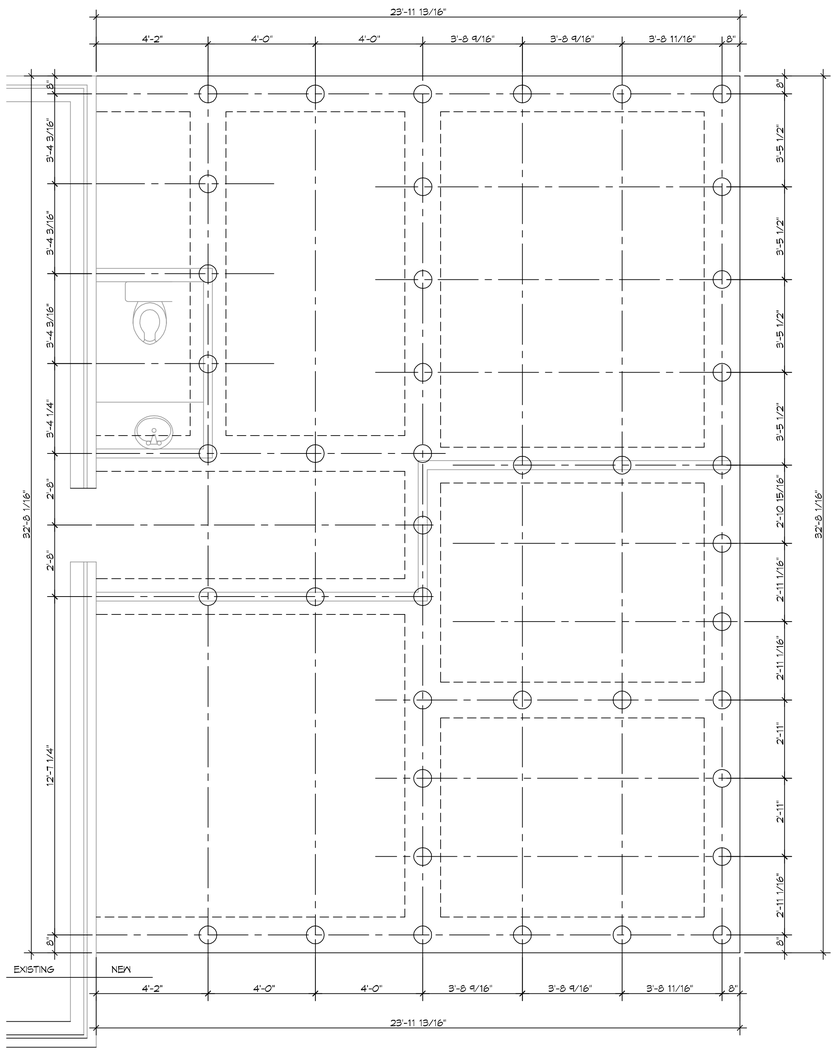

2 S101|S101 PILING PLAN
SCALE: 3/8" = 1'-0"
PILING

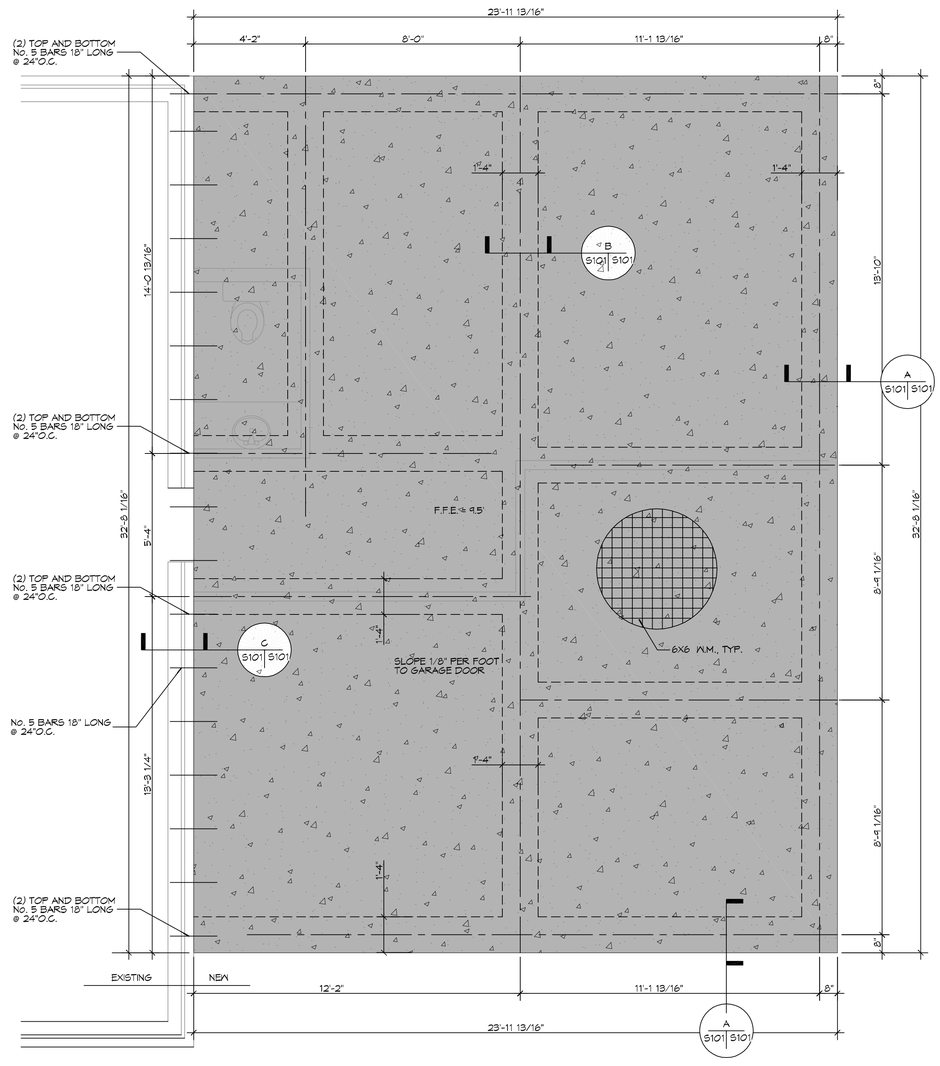

3 S101|S101 FOUNDATION PLAN
SCALE: 3/8" = 1'-0"
FOUNDATION

DAMMON ENGINEERING, INC.
www.dammonengineering.com
info@dammonengineering.com
Fax: 985.641.5990
554 Old Spanish Trail
Houma, LA 70360
Ph: 985.649.5832

#	DESCRIPTION	DATE

REVISIONS

SEAL:

STATE OF LOUISIANA
BRIAN A. MISTICH
License No. 30187
12-17-2020
PROFESSIONAL ENGINEER

NEW GARAGE
ENZO PALLITTA
215 CHIBASCO LANE
SLIDELL, LOUISIANA 70458

JOB No:	2020
DATE:	12-17-2020
DRAWN BY:	CAD
CHECKED BY:	BAM

The seal appearing on this document, signed and dated, is original and/or electronically applied by the author whose name appears above. Unless otherwise specifically stated, it is intended only for the client named herein for the specific project for which it was prepared. Reuse by others, for other purposes or for any other project is prohibited without the express written consent of the author. Electronic copies of documents with an electronically applied seal are valid only as the original document described herein and subject to the terms and conditions of the agreement between the author and the client.

SHEET TITLE:
PILING AND FOUNDATION PLAN

DRAWING NUMBER:
S101

SHEET No: 2 of # 5

FILE NAME: J:\- RESIDENTIAL\Enzo Pallitta 215 Chubasco Eden Isles\Working dwgs\S102-Typical Connection Details-Schedules & Notes.dwg PLOT DATE & TIME: Thursday, December 17, 2020 10:17:29 AM

TABLE S102.7 - HEADER SPANS FOR INTERIOR LOAD-BEARING WALLS

HEADERS SUPPORTING	SIZE	DROPPED HEADER - BUILDING WIDTH (ft) 12	24	36	RAISED HEADER - BUILDING WIDTH (ft) 12	24	36
		MAXIMUM HEADER SPAN			MAXIMUM HEADER SPAN		
ONE FLOOR ONLY (SINGLE CENTER BEARING WALL)	(2) 2x4	4'-0"	2'-10"	2'-4"	4'-1"	2'-10"	2'-4"
	(2) 2x6	5'-11"	4'-3"	3'-5"	6'-1"	4'-4"	3'-6"
	(2) 2x8	7'-1"	5'-2"	4'-4"	7'-9"	5'-5"	4'-5"
	(2) 2x10	7'-11"	6'-0"	5'-0"	9'-2"	6'-6"	5'-3"
	(2) 2x12	8'-6"	6'-7"	5'-7"	10'-9"	7'-7"	6'-3"
	(3) 2x8	8'-5"	6'-4"	5'-3"	9'-8"	6'-10"	5'-7"
	(3) 2x10	9'-3"	7'-1"9'-10"	6'-0"	11'-5"	8'-1"	6'-7"
	(3) 2x12	9'-11"	7'-8"	6'-7"	13'-6"	9'-6"	7'-9"
	(4) 2x8	9'-5"	7'-2"	6'-0"	11'-2"	7'-11"	6'-5"
	(4) 2x10	10'-3"	7'-11"	6'-9"	13'-3"	9'-4"	7'-8"
	(4) 2x12	11'-0"	8'-7"	7'-4"	15'-7"	11'-0"	9'-0"

TABLE S102.8 - HEADER SPANS FOR EXTERIOR LOAD-BEARING WALLS RESISTING WIND LOADS EXP "C"

SIZE	120 MPH	130 MPH	140 MPH	150 MPH	160 MPH	170 MPH	180 MPH	195 MPH
(2) 2x4	5'-1"	4'-8"	4'-4"	4'-1"	3'-10"	3'-7"	3'-5"	3'-2"
(2) 2x6	6'-3"	5'-9"	5'-4"	5'-0"	4'-8"	4'-5"	4'-2"	3'-10"
(2) 2x8	6'-10"	6'-4"	5'-11"	5'-6"	5'-2"	4'-10"	4'-7"	4'-3"
(2) 2x10	7'-4"	6'-10"	6'-4"	5'-11"	5'-6"	5'-2"	4'-11"	4'-6"
(2) 2x12	7'-10"	7'-3"	6'-9"	6'-3"	5'-11"	5'-7"	5'-3"	4'-10"
(3) 2x8	8'-5"	7'-9"	7'-2"	6'-9"	6'-4"	5'-11"	5'-7"	5'-2"
(3) 2x10	9'-0"	8'-4"	7'-9"	7'-3"	6'-9"	6'-4"	6'-0"	5'-7"
(3) 2x12	9'-7"	8'-11"	8'-3"	7'-8"	7'-3"	6'-10"	6'-5"	5'-11"
(4) 2x8	9'-8"	9'-0"	8'-4"	7'-9"	7'-3"	6'-10"	6'-6"	6'-0"
(4) 2x10	10'-5"	9'-7"	8'-11"	8'-4"	7'-10"	7'-4"	6'-11"	6'-5"
(4) 2x12	11'-7"	11'-1"	10'-3"	9'-6"	8'-11"	8'-4"	7'-10"	6'-10"

TABLE S102.9 - SILL OR BOTTOM PLATE TO FOUNDATION CONNECTIONS RESISTING UPLIFT LOADS - 130 MPH WIND EXP "C"

BOTTOM PLATE TO FOUNDATION ANCHOR BOLT CONNECTION RESISTING	FOUNDATION SUPPORTING	MAXIMUM ANCHOR BOLT SPACING (INCHES) - 8' END ZONES	INTERIOR ZONES
UPLIFT LOADS	1 - 3 STORIES	50 INCHES ON CENTER	58 INCHES ON CENTER
NOTE: A MINIMUM OF ONE ANCHOR BOLT SHALL BE PROVIDED WITHIN 6 TO 12 INCHES OF EACH END OF EACH PLATE			

TABLE S102.10 - BOTTOM PLATE TO FOUNDATION CONNECTIONS (ANCHOR BOLTS) RESISTING LATERAL & SHEAR LOADS - EXP "C"

BOTTOM PLATE TO FOUNDATION ANCHOR BOLT CONNECTION RESISTING	FOUNDATION SUPPORTING	MAXIMUM ANCHOR BOLT SPACING (INCHES) - 1/2" Φ ANCHOR BOLTS	5/8" Φ ANCHOR BOLTS
UPLIFT LOADS	1 STORY	31 INCHES ON CENTER	48 INCHES ON CENTER

TABLE S102.11 - FULL HEIGHT STUD REQUIREMENT FOR HEADERS OR WINDOW SILL PLATES IN EXTERIOR WALLS EXP "C"

HEADER SPAN (FEET)	WALL STUD SPACING (INCHES) 12" O.C.	16" O.C.	24" O.C.
	NUMBER OF FULL HEIGHT STUD REQUIRED AT EACH END OF THE HEADER		
2	1	1	1
4	2	2	1
6	3	3	2
8	4	3	2
10	5	4	3
12	6	5	3
14	7	6	4
16	8	6	4

TABLE S102.5 - JACK STUD REQ - INT LOADBEARING WALLS

HEADER SUPPORTING	HEADER SPAN (FT)	ROOF SPAN 12 FEET - 3"	4.5"	5"	6"	24 FEET - 3"	4.5"	5"	6"	36 FEET - 3"	4.5"	5"	6"
		NUMBER OF JACK STUDS REQUIRED AT EACH END OF THE HEADER											
ONE FLOOR ONLY (CENTER BEARING)	2	1	1	1	1	1	1	1	1	1	1	1	1
	4	1	1	1	1	1	1	1	1	1	1	1	1
	6	1	1	1	1	1	1	1	1	2	1	1	1
	8	1	1	1	1	2	1	1	1	2	2	2	1
	10	1	1	1	1	2	2	1	1	3	2	2	2
	12	1	1	1	1	2	2	2	1	3	2	2	2
	14	2	1	1	1	3	2	2	2	4	3	3	2
	16	2	1	1	1	3	2	2	2	4	3	3	2
TWO FLOORS (CENTER BEARING)	2	1	1	1	1	1	1	1	1	2	1	1	1
	4	1	1	1	1	2	1	1	1	3	2	2	2
	6	2	1	1	1	3	2	2	2	4	3	2	2
	8	2	2	1	1	3	2	2	2	5	3	3	3
	10	2	2	2	1	4	3	3	2	6	4	4	3
	12	3	2	2	2	5	3	3	3	7	5	4	4
	14	3	2	2	2	6	4	4	3	8	5	5	4
	16	4	3	2	2	6	4	4	3	9	6	6	5

HEADER WIDTH - 3" (2-2x), 4.5" (3-2x), 5", 6.5" (4-2x) EACH W/ 1/2" PLYWOOD SPACER BETWEEN

TABLE S102.6 - JACK STUD REQ - EXTERIOR LOADBEARING WALLS

HEADER SUPPORTING	HEADER SPAN (FT)	ROOF LIVE LOAD 20 PSF - 3"	4.5"	5"	6"	GROUND SNOW LOAD 30 PSF - 3"	4.5"	5"	6"
		NUMBER OF JACK STUDS REQUIRED							
ROOF AND CEILING	2	1	1	1	1	1	1	1	1
	4	1	1	1	1	1	1	1	1
	6	2	1	1	1	2	1	1	1
	8	2	2	2	1	2	2	2	1
	10	3	2	2	2	3	2	2	2
	12	3	2	2	2	3	2	2	2
	14	4	3	2	2	4	3	2	2
	16	4	3	3	2	4	3	3	2
ROOF, CEILING, AND ONE CENTER BEARING FLOOR	2	1	1	1	1	1	1	1	1
	4	2	1	1	1	2	1	1	1
	6	2	2	2	1	3	2	2	2
	8	3	2	2	2	3	2	2	2
	10	4	3	2	2	4	3	3	2
	12	4	3	3	2	5	3	3	3
	14	5	4	3	3	5	4	3	3
	16	6	4	4	3	6	4	4	3

HEADER WIDTH - 3" (2-2x), 4.5" (3-2x), 5", 6" (4-2x) EACH W/ 1/2" PLYWOOD SPACER BETWEEN

TABLE S102.3 - NAILING SCHEDULE

DESCRIPTION	NUMBER OF COMMON NAILS	NUMBER OF BOX NAILS	SPACING
WALL FRAMING			
TOP PLATE TO TOP PLATE (FACE NAILED)	2-16d	2-16d	PER FOOT
TOP PLATE AT INTERSECTION (FACE)	4-16d	5-16d	JOINTS - EACH SIDE
STUD TO STUD (FACE-NAILED)	2-16d	2-16d	24" o.c.
HEADER TO HEADER (FACE NAILED)	16d	16d	16" o.c. EDGES
TOP OR BOTTOM PLATE TO STUD (END)	SEE TABLE	SEE TABLE	PER STUD
BOTTOM PLATE TO FLOOR JOIST, BANDJOIST, END JOIST OR BLOCKING	2-16d	2-16d	PER FOOT
ROOF SHEATHING			
WOOD STRUCTURAL PANELS	8d	10d	SEE TABLE S102.1
DIAGONAL BOARD SHEATHING			
1"x6" OR 1"x8"	2-8d	2-10d	PER SUPPORT
1"x10" OR WIDER	3-8d	3-10d	PER SUPPORT

TABLE S102.4 - BUILDING ENVELOPE REQUIREMENTS

OPAQUE ELEMENTS		ASSEMBLY MAXIMUM	INSULATION MIN. R-VALUE
ROOFS	INSULATION ENTIRELY ABOVE DECK	U-0.048	R-20.0 c.i.
	METAL BUILDING	U-0.065	R-19
	ATTIC AND OTHER	U-0.027	R-38
WALLS, ABOVE GRADE	MASS	U-0.151 @	R-5.7 c.i. @
	METAL BUILDING	U-0.113	R-13.0
	STEEL-FRAMED	U-0.124	R-13.0
	WOOD-FRAMED AND OTHER	U-0.089	R-13.0
FLOORS	MASS	U-0.107	R6-3 c.i.
	STEEL JOIST	U-0.052	R-19.0
	WOOD FRAMED AND OTHER	U-0.051	R-19.0
SLAB-ON-GRADE	UN-HEATED	F-0.730	NR
OPAQUE DOORS	SWINGING	U-0.700	NR
	NON-SWINGING	U-1.450	NR

c.i. = CONTINUOUS INSULATION; NR = NO INSULATION REQUIREMENT
@ = EXCEPTION APPLIES

ROOF UNDERLAYMENT NOTES

1. FOR ROOF SLOPES FROM TWO UNITS VERTICAL IN 12 UNITS HORIZONTAL (17-PERCENT SLOPE), UP TO FOUR UNITS VERTICAL IN 12 UNITS HORIZONTAL (33-PERCENT SLOPE), UNDERLAYMENT SHALL BE TWO LAYERS APPLIED IN THE FOLLOWING MANNER:
   a. APPLY A 19 INCH STRIP OF UNDERLAYMENT FELT PARALLEL WITH AND STARTING AT THE EAVES, FASTENED SUFFICIENTLY TO HOLD IN PLACE. STARTING AT THE EAVE, APPLY 36 INCH WIDE SHEETS OF UNDERLAYMENT, OVERLAPPING SUCCESSIVE SHEETS 19 INCHES, AND FASTENED SUFFICIENTLY TO HOLD IN PLACE.
2. FOR ROOF SLOPES OF FOUR UNITS VERTICAL IN 12 UNITS HORIZONTAL (33-PERCENT SLOPE) OR GREATER, UNDERLAYMENT SHALL BE ONE LAYER APPLIED IN THE FOLLOWING MANNER:
   a. UNDERLAYMENT SHALL BE APPLIED SHINGLE FASHION, PARALLEL TO AND STARTING FROM THE EAVE AND LAPPED 2 INCHES, FASTENED SUFFICIENTLY TO HOLD IN PLACE. END LAPS SHALL BE OFFSET BY 6 FEET.

SHINGLE APPLICATION & FASTENING NOTES

1. ASPHALT STRIP SHINGLES SHALL HAVE A MINIMUM OF SIX FASTENERS PER SHINGLE WHERE THE ROOF IS IN ONE OF THE FOLLOWING CATEGORIES:
   a. THE BASIC WIND SPEED IS 110 MPH OR GREATER AND THE EAVE IS 20 FEET OR HIGHER ABOVE GRADE.
   b. THE BASIC WIND SPEED IS 120 MPH OR GREATER.
   c. SPECIAL WIND ZONES.

GENERAL UPLIFT CONNECTION NOTES

ROOF ASSEMBLY TO WALL ASSEMBLY:
UPLIFT CONNECTIONS SHALL BE FROM RAFTER OR TRUSS TO WALL STUD. WHEN RAFTERS OR TRUSSES ARE NOT LOCATED DIRECTLY ABOVE STUDS, RAFTERS SHALL BE ATTACHED TO THE WALL PLATE AND THE WALL TOP PLATE SHALL BE ATTACHED TO THE WALL STUD WITH UPLIFT CONNECTIONS. UPLIFT CONNECTIONS SHALL BE IN ACCORDANCE WITH TABLE S102.10.

WALL ASSEMBLY TO WALL ASSEMBLY:
STORY TO STORY UPLIFT CONNECTIONS FROM UPPER STORY WALL STUD TO LOWER STORY WALL STUD. WHEN UPPER STORY WALL STUDS ARE NOT LOCATED DIRECTLY ABOVE LOWER WALL STUDS, THE STUDS SHALL BE ATTACHED TO A COMMON MEMBER IN THE FLOOR ASSEMBLY BY UPLIFT CONNECTIONS. UPLIFT CONNECTIONS SHALL BE IN ACCORDANCE WITH TABLE S102.11.

WALL ASSEMBLY TO FOUNDATION:
FIRST FLOOR WALL STUDS SHALL BE CONNECTED TO THE FOUNDATION, SILL, PLATE, OR BOTTOM PLATE. A MINIMUM OF A 1-1/4" x 20 GA. ASTM A653 GRADE 33 STEEL STRAP SHALL BE NAILED TO THE WALL STUDS AND HAVE A MINIMUM EMBEDMENT OF 7 INCHES IN CONCRETE FOUNDATIONS AND SLABS-ON-GRADE, 15 INCHES IN MASONRY BLOCK FOUNDATIONS, OR BE LAPPED UNDER THE BOTTOM PLATE, 3 INCH SQUARE WASHERS SHALL BE USED ON THE ANCHOR BOLTS AND ANCHOR BOLT SPACINGS SHALL NOT EXCEED THE REQUIREMENTS. STEEL STRAPS EMBEDDED IN OR IN CONTACT WITH SLAB-ON-GRADE OR MASONRY BLOCK FOUNDATIONS SHALL BE HOT-DIPPED GALV. AFTER FABRICATION, OR MANUF. FROM G185 OR Z450 GALV. STL. CONNECTIONS SHALL BE IN ACCORDANCE WITH TABLE S102.12.

TABLE S102.1 - ROOF SHEATHING OR CLADDING REQUIREMENT - 130 MPH WIND LOAD EXP "C"

SHEATHING LOCATION	RAFTER / TRUSS SPACING	E	F
		MAX NAIL SPACING FOR 8d COMMON NAILS OR 10d BOX NAILS (INCHES OC)	
INTERIOR ZONE	12" OC	6	12
	16" OC	6	12
	24" OC	6	12
PERIMETER EDGE ZONE	12" OC	6	12
	16" OC	6	12
	24" OC	6	6

110 MPH WIND - EXPOSURE "C" TYPICAL
E = NAIL SPACING AT PANEL EDGES, INCHES.
F = NAIL SPACING AT INTERMEDIATE SUPPORTS IN THE PANEL FIELD, INCHES.

TABLE S102.2 - WALL SHEATHING OR CLADDING REQUIREMENT - 130 MPH WIND LOAD EXP "C"

SHEATHING LOCATION	STUD SPACING	E	F
		MAX NAIL SPACING FOR 8d COMMON NAILS OR 10d BOX NAILS (INCHES OC)	
INTERIOR ZONE	12" OC	6	12
	16" OC	6	12
	24" OC	6	12
PERIMETER EDGE ZONE	12" OC	6	12
	16" OC	6	12
	24" OC	6	12

130 MPH WIND - EXPOSURE "C" TYPICAL
E = NAIL SPACING AT PANEL EDGES, INCHES.
F = NAIL SPACING AT INTERMEDIATE SUPPORTS IN THE PANEL FIELD, INCHES.

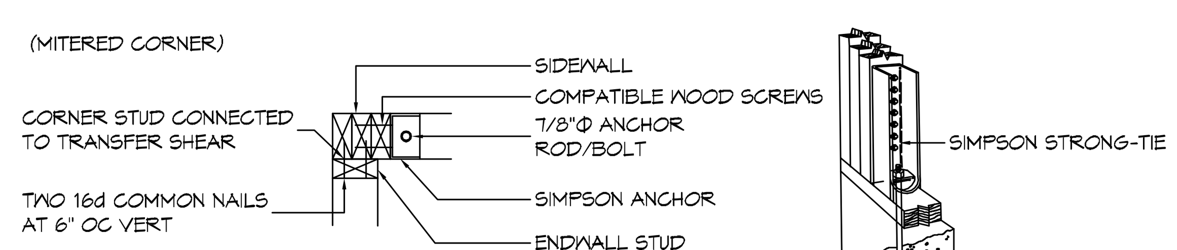

NOTE: HOLDDOWNS ARE REQUIRED AT THE END OF EACH SEGMENTED SHEARWALL SEGMENT OR AT THE EACH END OF A PERFORATED SHEARWALL. WHEN FULL HEIGHT SHEARWALL SEGMENTS MEET AT A CORNER, A SINGLE HOLDDOWN SHALL BE PERMITTED TO BE USED TO RESIST THE OVERTURNING FORCES IN BOTH DIRECTIONS WHEN THE CORNER FRAMING IN THE ADJOINING WALLS IS FASTENED TOGETHER TO TRANSFER THE UPLIFT LOAD.

(P) CORNER HOLDDOWN

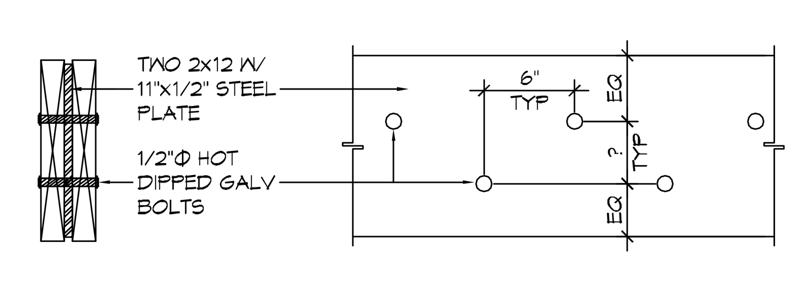

(N) FLITCH BEAM

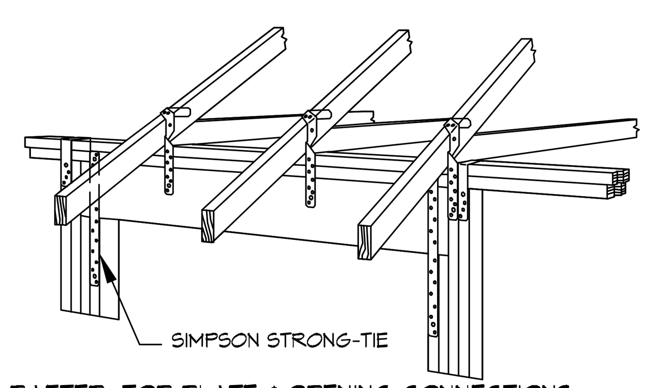

(M) RAFTER, TOP PLATE & OPENING CONNECTIONS

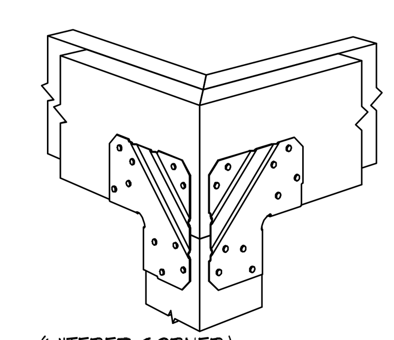

(L) POST TO BEAM

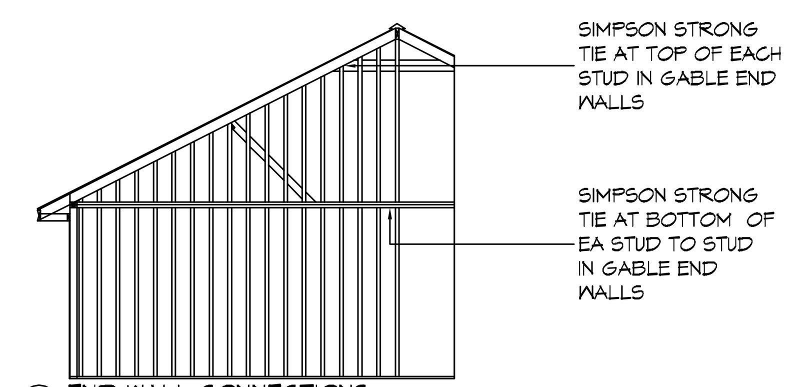

(K) END WALL CONNECTIONS

(J) SIMPSON MSTAMB36

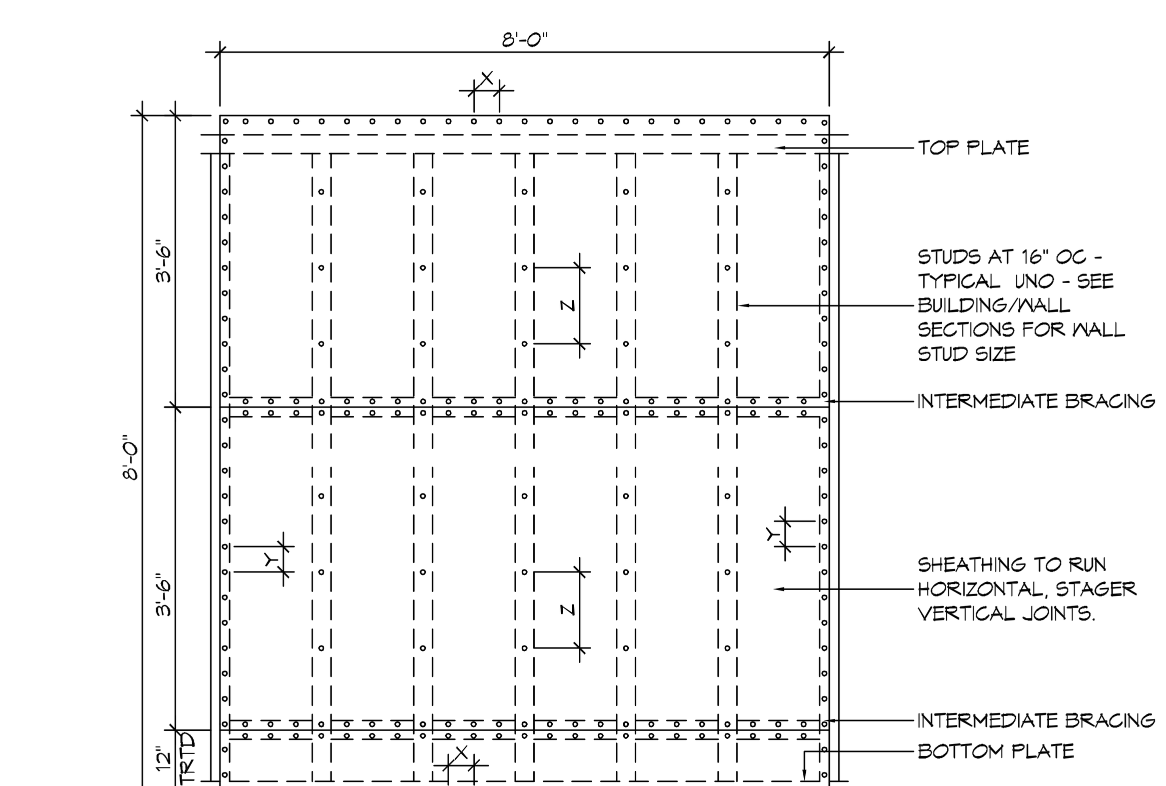

NAIL SPACING
X = 4" OC
Y = 4" OC
Z = 12" OC

X = PLATE EDGE NAIL SPACING
Y = LONG EDGE NAIL SPACING
Z = FIELD NAIL SPACING

(H) SHEAR WALL EXTERIOR SHEATHING NAILING PATTERN

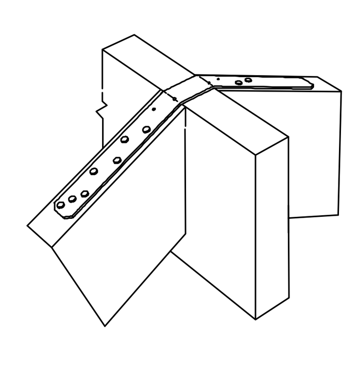

SIMPSON STRONG-TIE

AT ALL RIDGE CONNECTIONS

(G) RIDGE BEAM/BOARD

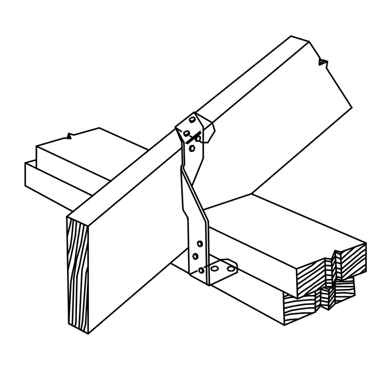

SIMPSON STRONG-TIE

(F) TOP PLATE TO RAFTER

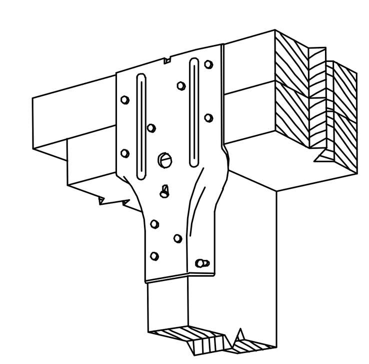

SIMPSON STRONG-TIE

(E) STUD TO TOP PLATE

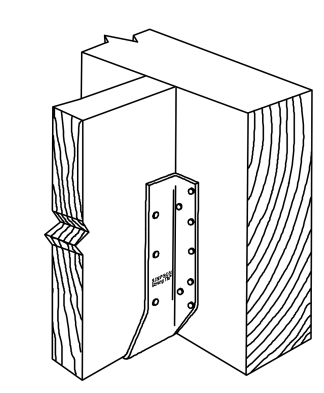

SIMPSON STRONG-TIE

(D) FLOOR JOIST

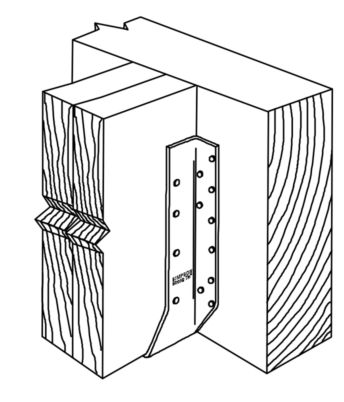

SIMPSON STRONG-TIE

(C) DBL FLOOR JOIST

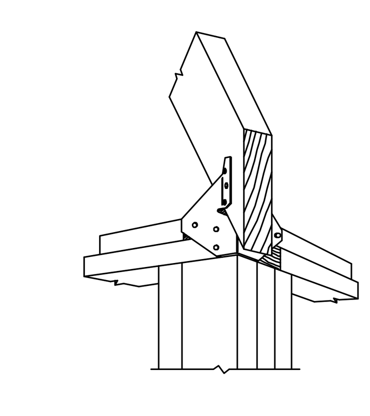

SIMPSON STRONG-TIE

(B) HIP RAFTER

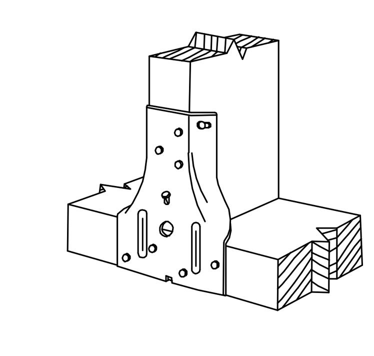

SIMPSON STRONG-TIE

(A) STUD TO SILL PLATE

TYPICAL CONNECTION DETAILS

SCALE: NTS

DAMMON
ENGINEERING, INC.
554 Old Spanish Trail
Slidell, LA 70458
PH: 985.649.5832
www.dammonengineering.com
info@dammonengineering.com
Fax: 985.641.5950

#	DESCRIPTION	DATE
	REVISIONS	

SEAL:

ENZO PALLITTA
NEW GARAGE
215 CHUBASCO LANE
SLIDELL LOUISIANA 70458

JOB No: 2020 DATE: 12-11-2020
DRAWN BY: CKD CHECKED BY: CKD

SHEET TITLE:
TYPICAL CONNECTION DETAILS, SCHEDULES, AND NOTES

DRAWING NUMBER:
S102

DOOR SCHEDULE

MK	WIDTH	HEIGHT	THK	DOOR MAT	FRAME MAT	RATED	REMARKS
100	2'-0"	6'-8"	1-3/4"	MASONITE	WOOD	NR	
101	3'-0"	6'-8"	1-3/4"	MASONITE	WOOD	$\frac{1}{2}$	
102	16'-0"	7'-0"	1-3/4"	METAL	WOOD	NR	

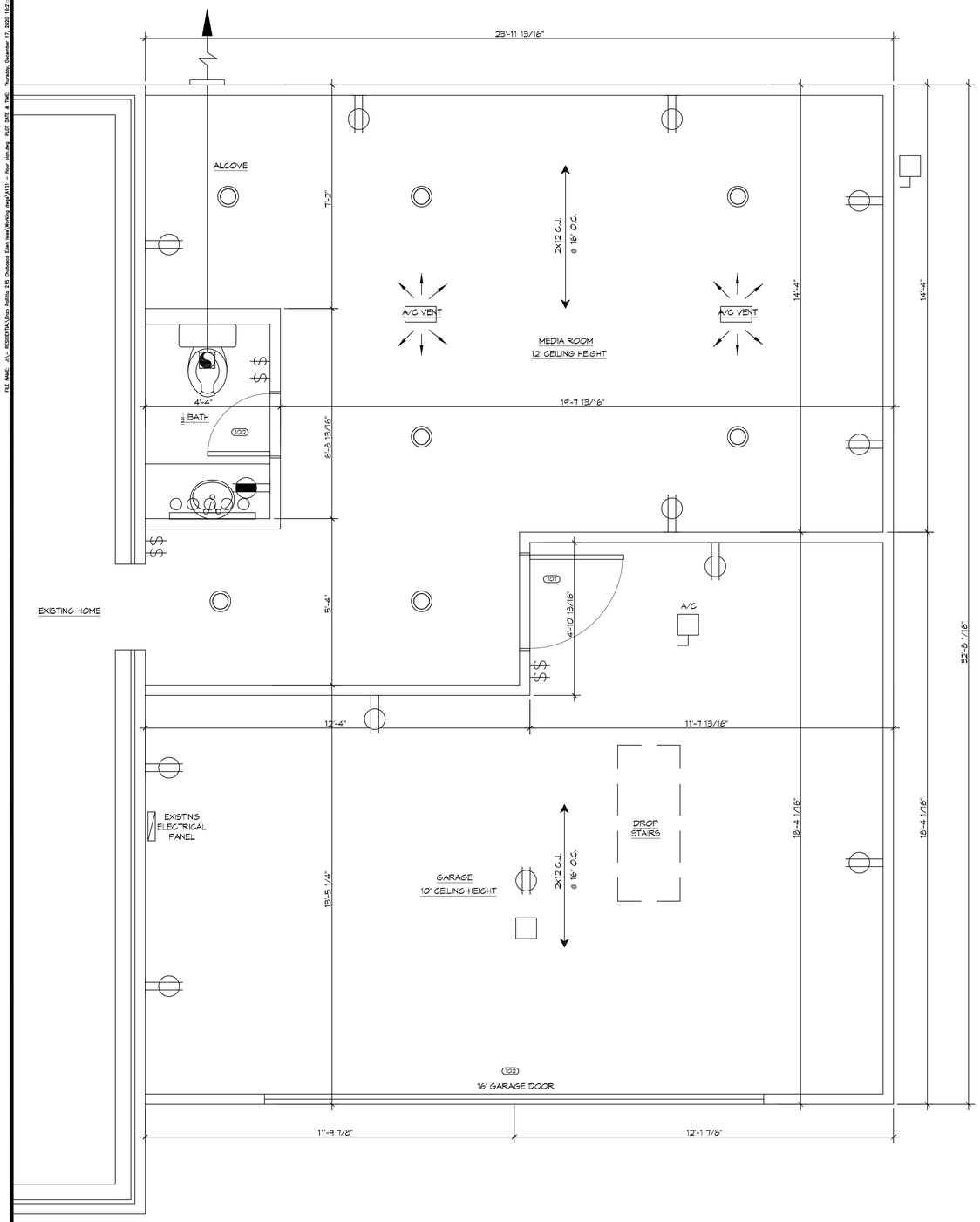

5 A101 | A101

ADDITION FLOOR PLAN

SCALE: 1/2" = 1'-0"

ARCHITURAL

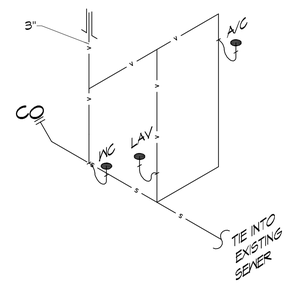

PLUMBING RISER

SCALE: 1/4"=1'-0"

LIGHTING LEGEND

- RECESSED LIGHT - FLUORESCENT OR LED
- FLUORESCENT OR LED
- ELECTRIC PANEL BOARD
- LIGHT SWITCH 120V
- EXHAUST FAN/LIGHT COMBO

POWER LEGEND

SYMB

- STANDARD 120V DUPLEX RECEPTACLE, 18" AFF (UNLESS OTHERWISE NOTED)
- GFCI DUPLEX RECEPTACLE
- WALL MOUNTED DATA OUTLET
- FUSED DISCONNECT, FUSE PER MANUFACTURERS RECOMMENDATIONS.

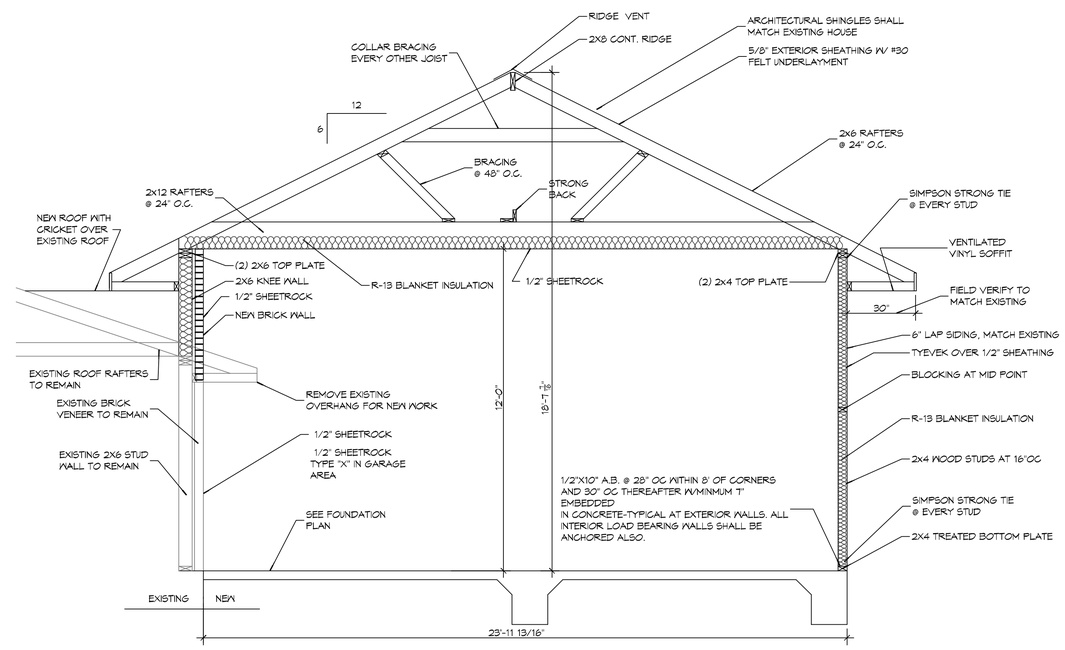

TYPICAL SECTION

SCALE: 3/8" = 1'-0"

FRAMING

DAMMON ENGINEERING, INC.
554 Old Spanish Trail
Slidell, LA 70458
PH: 985.649.5832
www.dammonengineering.com
info@dammonengineering.com
Fax: 985.641.5950

#	DESCRIPTION	DATE

REVISIONS

SEAL:

STATE OF LOUISIANA
BRIAN A. MISTICH
License No. 30187
12-17-2020
PROFESSIONAL ENGINEER

NEW GARAGE

ENZO PALLITTA

215 CHUBASCO LANE
SLIDELL LOUISIANA 70458

JOB No: 2020 | DATE: 12-17-2020
DRAWN BY: CKD | CHECKED BY: CKD

These drawings and specifications, designs and arrangements represent intellectual property and are the property of Dammon Engineering, and are not to be used in any way, or for any purpose, without the written consent of Dammon Engineering. Visual contact with these drawings or specifications shall constitute acceptance of the restrictions stated herein.

SHEET TITLE:
FLOOR PLAN

DRAWING NUMBER:

A101

SHEET No: 4 of # 5

FILE NAME: J:_REGIONAL\Civil Facility 215 Chubasco Ln_Work\Working dwgs\A101 - Floor plan.dwg PLOT DATE & TIME: Thursday, December 17, 2020 10:31:18 AM

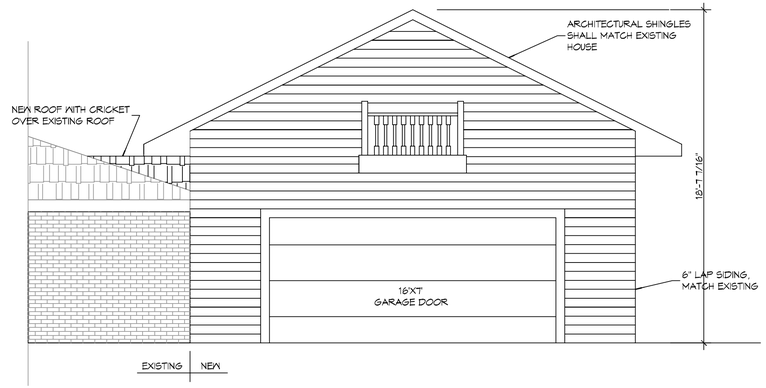

6 A102 A102 **FRONT ELEVATION**
SCALE: 1/4" = 1'-0" ELEVATION

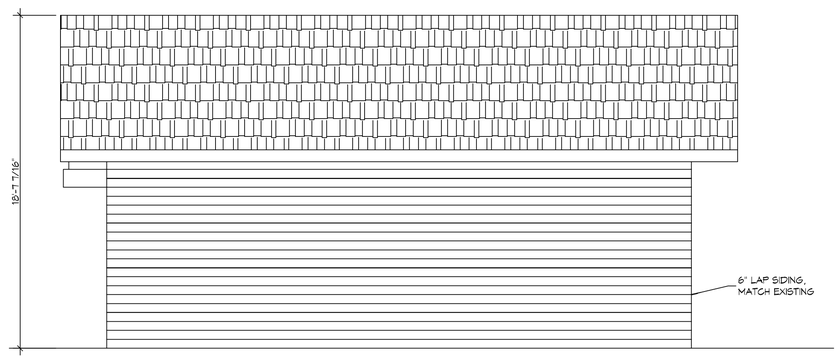

7 A102 A102 **RIGHT SIDE ELEVATION**
SCALE: 1/4" = 1'-0" ELEVATION

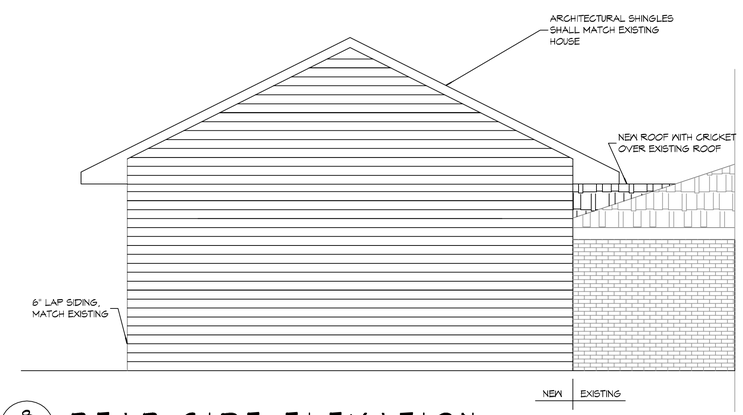

8 A102 A102 **REAR SIDE ELEVATION**
SCALE: 1/4" = 1'-0" ELEVATION

DAMMON ENGINEERING, INC.
www.dammonengineering.com
info@dammonengineering.com
Fax: 985.641.5950
554 Old Spanish Trail
Slidell, LA 70458
PH: 985.649.5032

REVISIONS

#	DESCRIPTION	DATE

SEAL:

STATE OF LOUISIANA
BRIAN A. MISTICH
License No. 30187
12-17-2020
PROFESSIONAL ENGINEER

NEW GARAGE

ENZO PALLITTA

215 CHUBASCO LANE
SLIDELL, LOUISIANA 70458

JOB No:	2020	DATE:	12-17-2020
DRAWN BY:	CAD	CHECKED BY:	CAD

This drawing is an instrument of service and is the property of Dammon Engineering, Inc. and shall not be reproduced in whole or in part without written permission of Dammon Engineering, Inc. Any reproduction of this drawing or any part thereof, or any work or products shown thereon, without written permission of Dammon Engineering, Inc. is prohibited and shall be subject to legal action.

SHEET TITLE:
BUILDING ELEVATIONS

DRAWING NUMBER:
A102

SHEET No: 5 of # 5