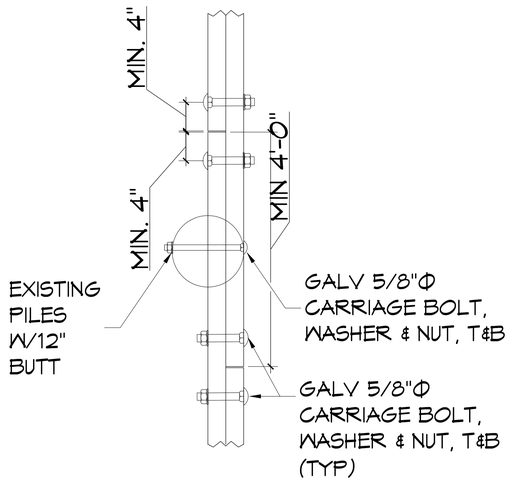

3 S-1|S-1 **DETAIL**

SCALE: 1/4" = 1'-0" BEAM SPLICING PLAN VIEW

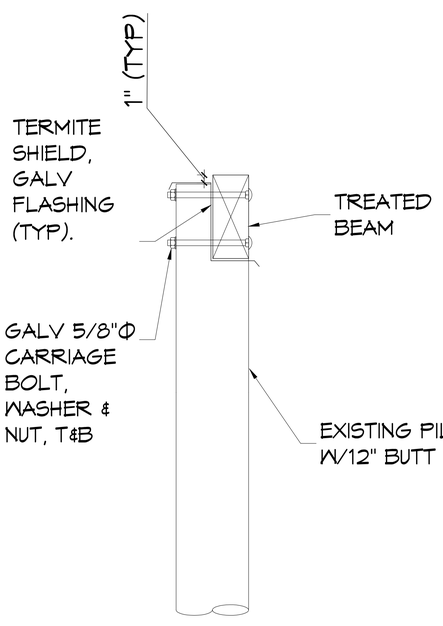

2 S-1|S-1 **DETAIL**

SCALE: 1/4" = 1'-0" PILING BEAM SUPPORTS

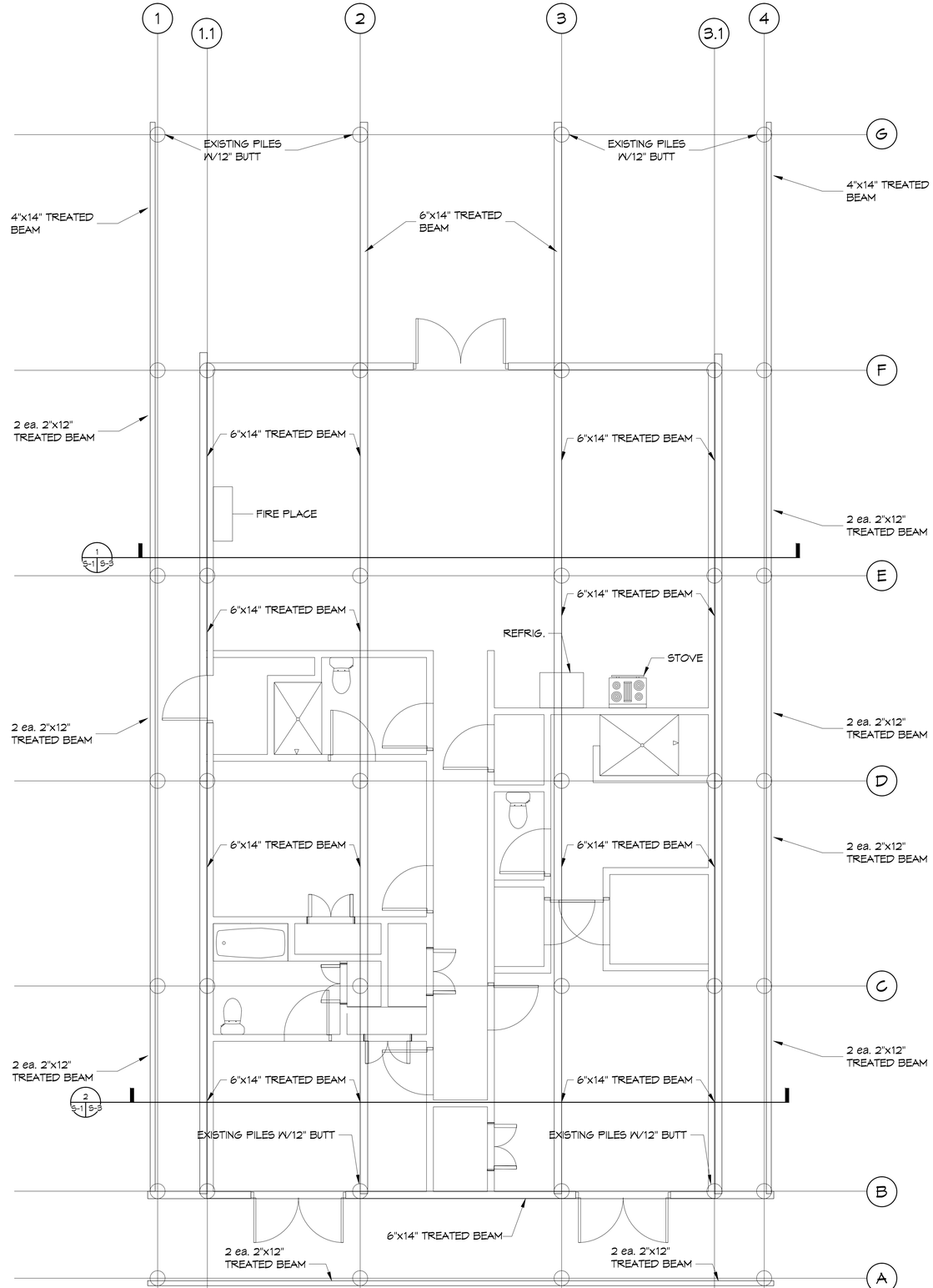

1 S-1|S-1 **PILING PLAN**

SCALE: 1/4" = 1'-0"

GENERAL STRUCTURAL NOTES

1. THE STRUCTURE IS DESIGNED TO BE SELF-SUPPORTING & STABLE AFTER THE BUILDING IS FULLY COMPLETED. IT IS SOLELY THE CONTRACTOR'S RESPONSIBILITY TO DETERMINE ERECTION PROCEDURES & SEQUENCE & TO INSURE THE SAFETY OF THE BUILDING AND ITS COMPONENT PARTS DURING ERECTION. THIS INCLUDES THE ADDITION OF WHATEVER SHORING, SHEETING, TEMPORARY BRACING, BUYS OR TIEDOWNS WHICH MIGHT BE NECESSARY DURING CONSTRUCTION. SUCH MATERIAL SHALL REMAIN THE CONTRACTOR'S PROPERTY AFTER THE COMPLETION OF THE PROJECT.
2. IT IS SOLELY THE CONTRACTOR'S RESPONSIBILITY TO FOLLOW ALL APPLICABLE SAFETY CODES & REGULATIONS DURING ALL PHASES OF CONSTRUCTION.
3. SHOULD ANY OF THE DETAILED INSTRUCTIONS SHOWN ON THE PLANS CONFLICT WITH THE GENERAL STRUCTURAL NOTES, THE SPECIFICATIONS, OR WITH EACH OTHER, THE STRICTEST PROVISION SHALL GOVERN.
4. GOVERNING CODES: INTERNATIONAL RESIDENTIAL CODE 2012 AND ASCE STANDARD 7-10.
5. UNLESS OTHERWISE SPECIFICALLY SHOWN DESIGN, FABRICATION AND ERECTION SHALL BE GOVERNED BY THE LATEST REVISIONS OF :
   - 5.1. NATIONAL DESIGN SPECIFICATION FOR WOOD CONSTRUCTION BY NFPA.
   - 5.2. U.S. PRODUCT STANDARD PS-1 FOR CONSTRUCTION AND INDUSTRIAL PLYWOOD.
   - 5.3. APA DESIGN/CONSTRUCTION GUIDE - RESIDENTIAL AND COMMERCIAL.
6. MISCELLANEOUS:
   - 6.1 USE ON LINE OF SOLID BLOCKING OR CROSS BRIDGING AT 4'-0" O.C. MAXIMUM, FOR ALL JOIST AND RAFTERS. USE SOLID BLOCKING AT BEARINGS.
   - 6.2 USE SOLID BLOCKING AT MID-HEIGHT FOR ALL INTERIOR AND EXTERIOR STUDWALLS.
   - 6.3 PROVIDE BLOCKING IN WALL TO SECURE MOUNTED MILLWORK, SHELVES, FIXTURES, MIRRORS, TOILET ACCESSORIES AND OTHER ITEMS REQUIRING A PERMANENT ATTACHMENT TO THE WALL.
   - 6.4 USE DOUBLE STUDS UNDER BEAM AND LINTEL BEARING, UNLESS SHOWN OTHERWISE.
   - 6.5 PLYWOOD SUBFLOORING SHALL BE 3/4" THICK TONGUE AND GROOVE STURDYFLOOR. APPLY CONTINUOUS BEAD OF GLUE ON JOISTS AND GROOVE OF TONGUE-AND-GROOVE PANELS. ATTACH SUBFLOORING TO JOIST USING SCREWS.
   - 6.6 BEFORE APPLYING FINISH FLOORING, SET SCREWS 1/8" BUT DO NOT FILL. LIGHTLY SAND ANY SURFACE ROUGHNESS, PARTICULARLY AT JOINTS AND AROUND WALLS.
   - 6.7 WALLS SHALL BE 2x4 STUDS AT 16" O.C., UNLESS NOTED OTHERWISE. WHERE PLUMBING IS REQUIRED IN WALL, WALL SHALL BE 2x6 STUDS AT 16" O.C., UNLESS NOTED OTHERWISE.
   - 6.8 FLOOR, ATTIC, AND ROOF FRAMING SHALL BE OF SIZES AS INDICATED ON FRAMING PLANS. PROVIDE WOOD CROSS BRIDGING WHERE INDICATED ON DRAWINGS OR WHEN JOIST EXCEEDS 8'. LOCATE (3)2X12'S BELOW BEARING WALLS OR FLOOR ABOVE AND/OR AS INDICATED ON FRAMING PLANS. BEAM SHALL BEAR ON ENTIRE WIDTH OF BEARING WALL TOP PLATES. LOCATE THREE STUDS AT BEAM BEARING POINTS BELOW DOUBLE TOP PLATE OR AS SHOWN ON PLAN. PROVIDE WOOD COLLAR BRACES AT EACH RAFTER 24" BELOW CROWN OF ROOF.
   - 6.9 PLYWOOD ROOFING SHALL BE APA 24/0, 5/8" THICK. NAIL WITH 8D NAILS SPACED AT 6" O.C. AT PANEL EDGES AND 12" O.C. AT INTERMEDIATE SUPPORTS. PROVIDE PLY CLIPS AT UNSUPPORTED EDGES BETWEEN ROOF JOISTS.
   - 6.10 COORDINATE FRAMING WITH HVAC, ELECTRICAL AND PLUMBING REQUIREMENTS.
   - 6.11 BORED HOLES SHALL BE 2" CLEAR FROM TOP OR BOTTOM EDGE OF JOIST, NOT LARGER THAN 1-1/4" AND NOT IN MIDDLE OF SPAN.
   - 6.12 STRAP ALL PLATES CUT AWAY FOR PLUMBING WITH 1-1/2" WIDE NO. 24 GAUGE GALVANIZED STRAPS 18" LONG, BOTH SIDES OF WALL-SPIKED TO PLATES.
   - 6.13 PROVIDE STUD POSTS MADE UP OF MULTIPLE STUDS BENEATH END BEARING OF BEAM SHOWN ON FRAMING PLAN. NAIL EACH STUD TO ADJACENT STUD IN THE POST WITH 16d NAILS AT 12" O.C. (ON STUD CENTERLINE) AND WITHIN 3" OF EACH END. CUT STUDS CAREFULLY TO INSURE FULL AND COMPLETE BEARING TOP AND BOTTOM.
   - 6.14 STAIR STRINGERS SHALL BE 2x12. INSTALL INTERMEDIATE STRINGER FOR STAIRS OVER 30" WIDE.
   - 6.15 HIP RAFTERS, RIDGE BOARDS AND VALLEY RAFTERS SHALL BE ONE SIZE LARGER THAN RAFTERS, UNLESS NOTED OTHERWISE.
   - 6.16 PROVIDE TERMITE TREATMENT DURING APPROPRIATE STAGE OF CONSTRUCTION.
   - 6.17 DOUBLE UP ON FLOOR JOISTS UNDER ALL WALLS.
   - 6.18 PROVIDE SOLID BLOCKING ON ALL HEADERS.
   - 6.19 PROVIDE JOIST BLOCKING MAXIMUM 3' O.C.

FOUNDATION & STRUCTURAL DIMENSION LUMBER NOTES

1. PROVIDE STRUCTURAL FRAMING MEMBERS OF THE SIZES INDICATED ON THESE STRUCTURAL AND ARCHITECTURAL DRAWINGS, UNLESS INSTRUCTED OTHERWISE. USE PRESSURE TREATED SOUTHERN PINE NO. 2 MINIMUM FOR ALL BEAMS, FLOOR JOIST AND BOTTOM SILL PLATES.
   - 1.1 BEAMS SHALL BE PRESSURE TREATED CONFORMING TO AWPA U3B USING A WATER BASED TREATMENT. ALL DOUBLE 2x12 BEAMS SHALL BE GLUED AND NAILED.
   - 1.2. FLOOR JOIST AND BOTTOM SILL PLATE SHALL BE PRESSURE TREATED CONFORMING TO AWPA U3B.

DAMMON ENGINEERING, INC.
Architects & Engineers
www.dammonengineering.com
info@dammonengineering.com
P: 985.649.5932
F: 985.641.5950
Chief Architect: Kevin J. Kinchen, NCARB
Chief Engineer: Brian Mistich, PE
5500 Groves Trail
Slidell, LA 70458

#	DESCRIPTION	REVISIONS	DATE

SEAL:

PRELIMINARY NOT FOR CONSTRUCTION

STRUCTURAL DRAWINGS
TERRILLION RESIDENCE
25100 CHEF MENTEUR HWY
NEW ORLEANS, LOUISIANA

JOB No: 000 DATE: APRIL 16 2015
DRAWN BY: JT CHECKED BY: CKD

THESE DRAWINGS ARE THE PROPERTY OF DAMMON ENGINEERING & ARCHITECTURE AND MUST REMAIN THE PROPERTY OF DAMMON ENGINEERING. NO PART OF THESE DRAWINGS MAY BE REPRODUCED OR USED WITHOUT WRITTEN CONSENT OF DAMMON ENGINEERING. THESE DRAWINGS ARE INSTRUMENTS OF SERVICE THROUGH EXECUTION OF THE PROJECT ONLY. THE WORK HAS BEEN PREPARED AND DEVELOPED WITHOUT WRITTEN CONSENT OF DAMMON ENGINEERING & ARCHITECTURE, AND SHALL NOT BE USED FOR ANY OTHER PROJECT.

SHEET TITLE:
TITLE-1

DRAWING NUMBER:
S-1

SHEET No: 1 of 4