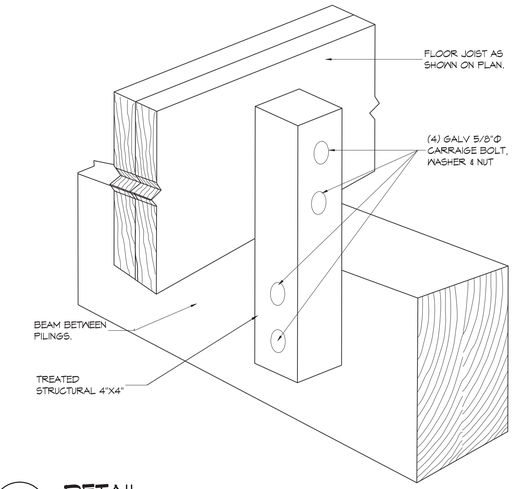

4 S-2.S-2 **DETAIL**

SCALE: 3/16" = 1'-0" ALTERNATE METHOD OF STRAPING

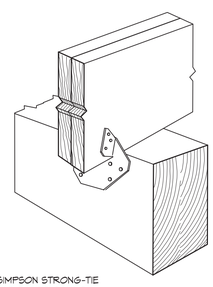

3 S-2.S-2 **DETAIL**

SCALE: 3/16" = 1'-0" DOUBLE JOIST

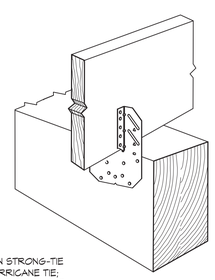

2 S-2.S-2 **DETAIL**

SCALE: 3/16" = 1'-0" SINGLE JOIST

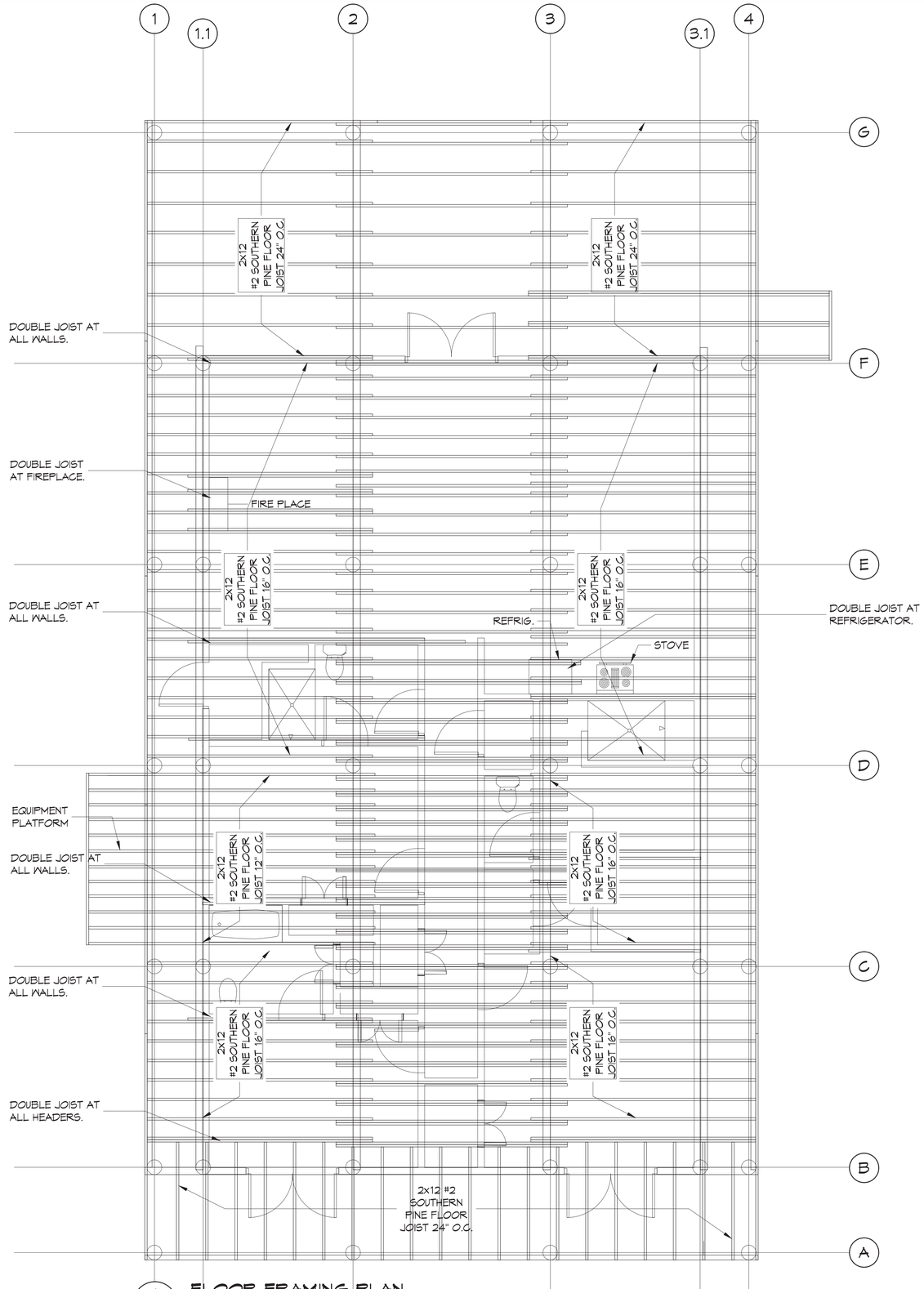

1 S-2.S-2 **FLOOR FRAMING PLAN**

SCALE: 1/4" = 1'-0"

DAMMON ENGINEERING, INC.
Architects & Engineers
www.dammoneng.com
info@dammoneng.com
Ph: 985.649.5832
F: 985.641.5950
Chief Engineer: Kevin J. Kinchen, NCARB
Chief Engineer: Brian Mistich, PE
5500 Oliver Loop Trail
Slidell, LA 70458

#	DESCRIPTION	DATE
	REVISIONS	

STATE OF LOUISIANA
BRIAN A. MISTICH
License No. 30187
PROFESSIONAL ENGINEER

STRUCTURAL DRAWINGS

TERRILLION RESIDENCE

25100 CHEF MENTEUR HWY
NEW ORLEANS, LOUISIANA

JOB No: 000 DATE: APRIL 16 2015
DRAWN BY: JT CHECKED BY: CKD

THIS DRAWING IS AN INSTRUMENT OF SERVICE, THE DESIGN AND ARRANGEMENT OF THE SHEETS AND THEREON IS THE PROPERTY OF DAMMON ENGINEERING, AND MUST REMAIN THE PROPERTY OF DAMMON ENGINEERING, AND MUST BE RETURNED UPON REQUEST. THE REPRODUCTION, ALTERATION OR USE FOR ANY PURPOSE OTHER THAN THE PROJECT FOR WHICH IT WAS PREPARED AND DELIVERED WITHOUT WRITTEN CONSENT OF DAMMON ENGINEERING IS PROHIBITED. ALL RIGHTS ARE RESERVED UNDER THE COPYRIGHT LAWS OF THE UNITED STATES.

SHEET TITLE:
TITLE-1

DRAWING NUMBER:
S-2

SHEET No: 2 of 4