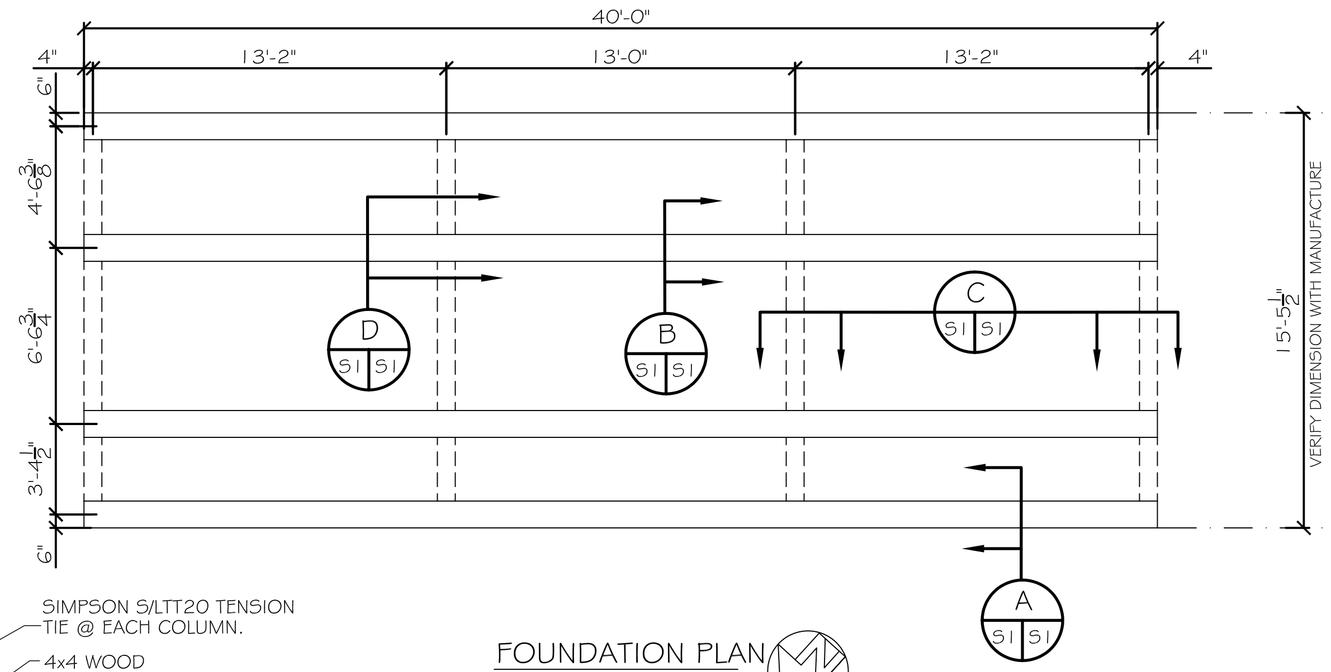

FOUNDATION PLAN
SCALE: 1/4"=1'-0"

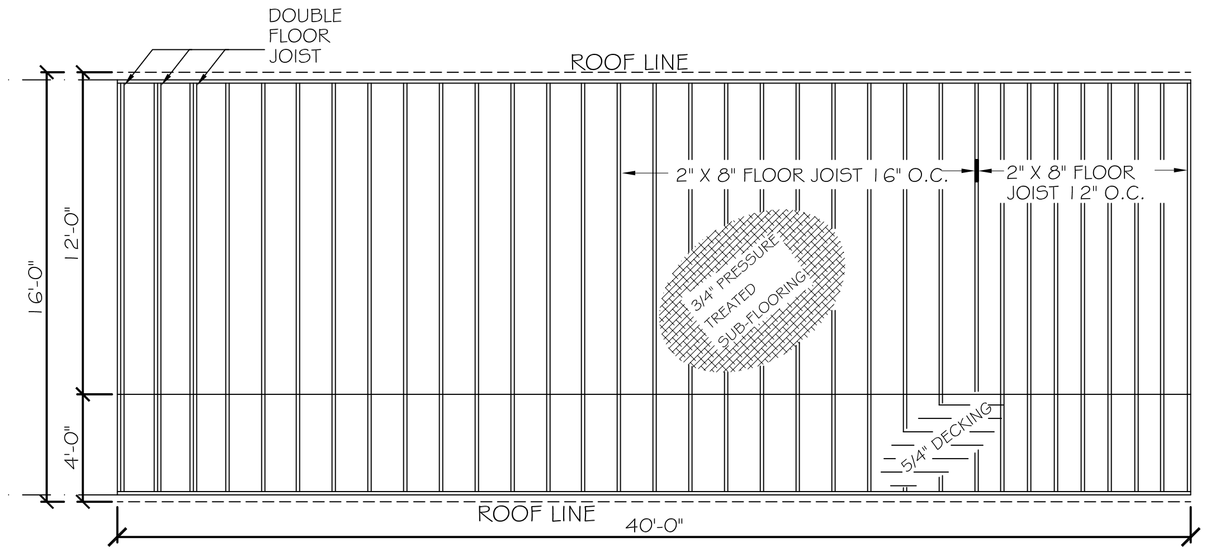

FLOOR FRAMING
SCALE: 1/4"=1'-0"

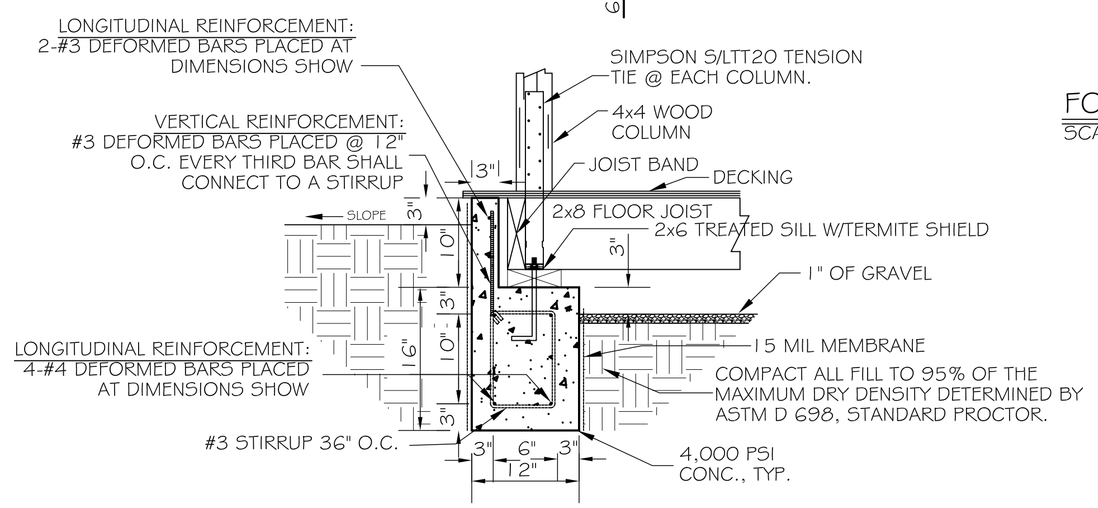

SECTION A
N.T.S.

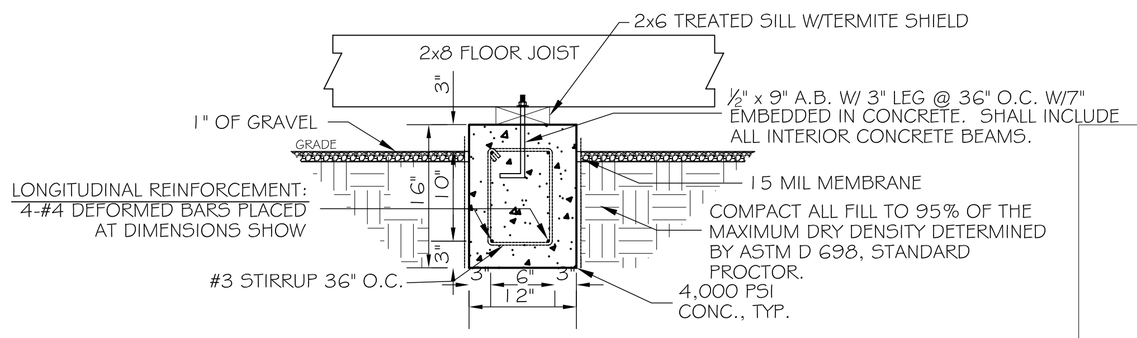

SECTION B
N.T.S.

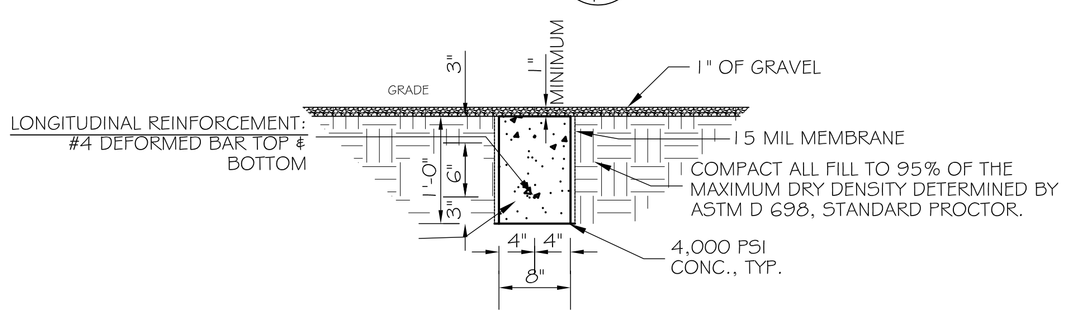

SECTION C
N.T.S.

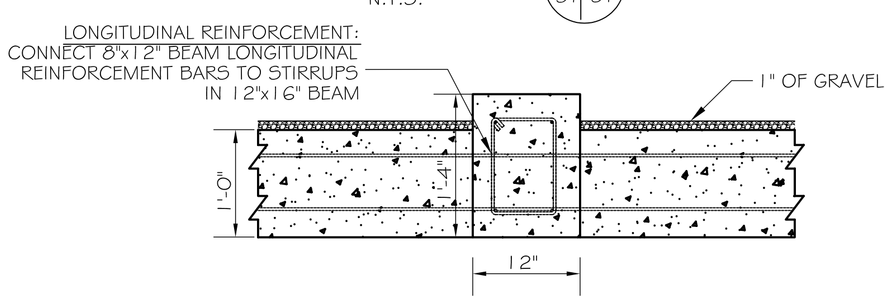

SECTION D
N.T.S.

FOUNDATION NOTES:

1. THE CONCRETE MIX SHALL HAVE A MINIMUM COMPRESSIVE STRENGTH OF 4,000 PSI AT 28 DAYS. CONCRETE MIX SHALL BE IN ACCORDANCE WITH ACI-318.
2. ALL CONVENTIONAL REINFORCING STEEL SHALL MEET ASTM-A615 (GRADE 60).
3. ONE LAYER OF POLYETHYLENE VAPOR BARRIER SHALL BE PLACED UNDER ALL CONCRETE. VAPOR RETARDER TO BE 15 MIL, STRENGTH; ASTM E 1745 CLASS A, PERMEANCE LESS THAN 0.01 PERMS, EQUAL TO STEGO INDUSTRIES STEGO WRAP, ECOSHIELD-E 15 MIL BY EPRO, OR IRONBAR 15 BY FLATIRON FILMS. PROVIDE APPROPRIATE ACCESSORIES FOR A COMPLETE SYSTEM.
4. ALL REINFORCING STEEL SHALL BE SECURELY SUPPORTED TO PREVENT BOTH VERTICAL AND HORIZONTAL MOVEMENT DURING CONCRETE PLACEMENT.
5. THE CONTRACTOR SHALL VERIFY ALL DROPS, OFFSETS, BRICK LEDGES, DIMENSIONS AND CONFIGURATIONS. CONTRACTOR MUST BE RESPONSIBLE FOR SAME.
6. GRADE BEAM SIZES MAY VARY BY -5%, +20%.
7. ALL SUB GRADE FILL SHALL BE SELECT GRANULAR MATERIAL COMPACTED TO 95% STANDARD PROCTOR DENSITY IN A MAXIMUM OF 6" LIFTS.
8. ALL RUNOFF WATER MUST BE CARRIED AWAY FROM THE SLAB TO PREVENT SATURATION OF THE SUB-BASE.
9. ALL TREES WITHIN CLOSE PROXIMITY SHALL BE REMOVED TO PREVENT THE ROOTS FROM EXTENDING UNDER THE SLAB.
10. PROVIDE AND MAINTAIN IMMEDIATE SITE DRAINAGE BEFORE, DURING, AND AFTER CONSTRUCTION. PROVIDE GRADING, SWELLS, AND SUMP PUMPS AS MAY BE REQUIRED TO IMMEDIATELY DRAIN ALL RAINWATER FROM THE CONSTRUCTION AREA. FOOTING EXCAVATIONS SHOULD BE OBSERVED AND CONCRETE PLACED AS QUICKLY AS POSSIBLE TO AVOID EXPOSURE OF THE FOOTING BOTTOMS TO WETTING AND DRYING. SURFACE RUNOFF WATER SHOULD BE DRAINED AWAY FROM THE EXCAVATIONS AND NOT BE ALLOWED TO POND PRIOR OR AFTER CONCRETE PLACEMENT. IF IT IS REQUIRED THAT A FOOTING EXCAVATIONS BE LEFT OPEN FOR MORE THAN ONE DAY, THEY SHOULD BE PROTECTED TO REDUCE EVAPORATION OR ENTRY OF MOISTURE.
11. TREAT SOIL BELOW SLAB FOR TERMITES.

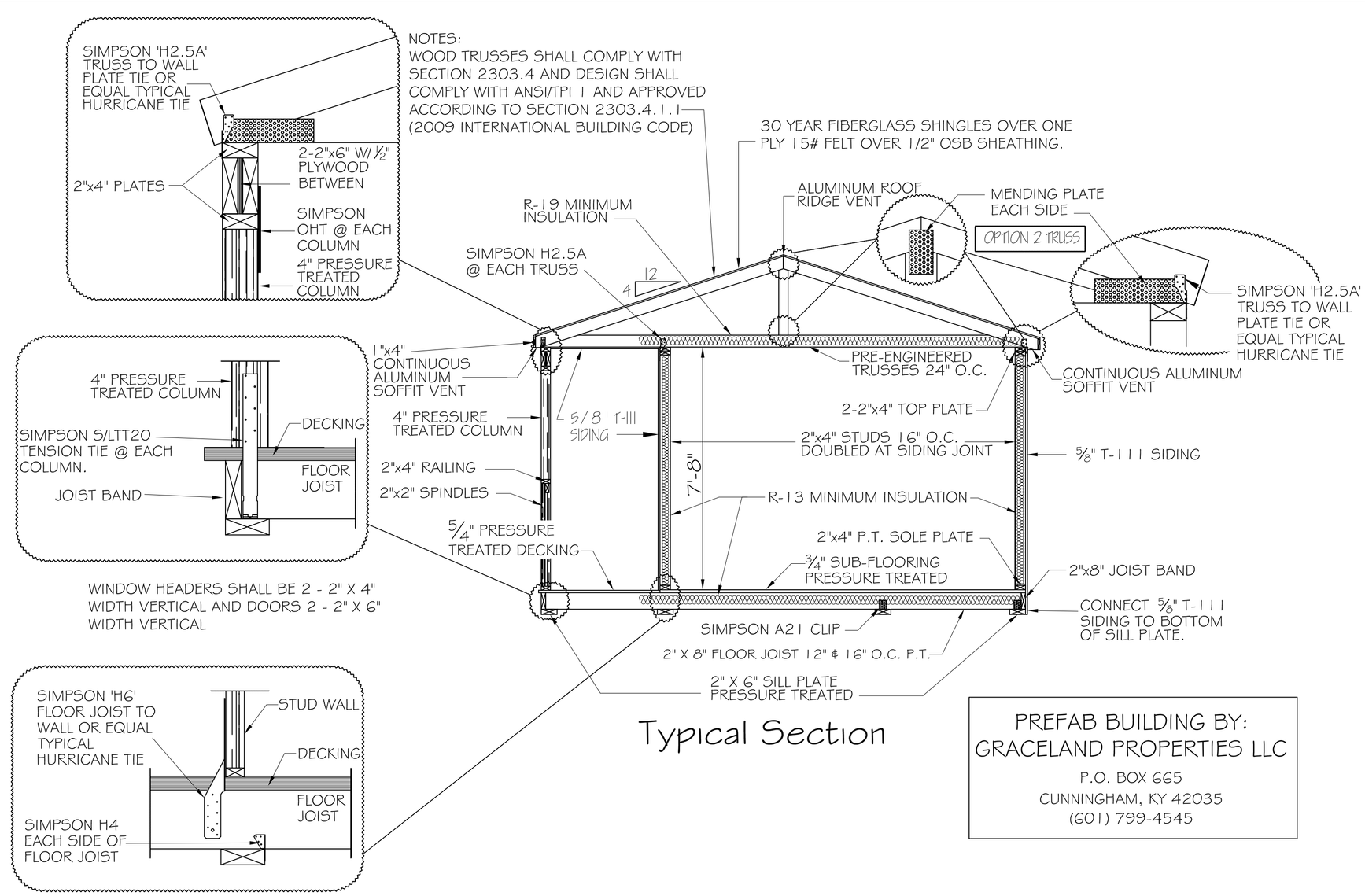

Typical Section

PREFAB BUILDING BY:
GRACELAND PROPERTIES LLC
P.O. BOX 665
CUNNINGHAM, KY 42035
(601) 799-4545

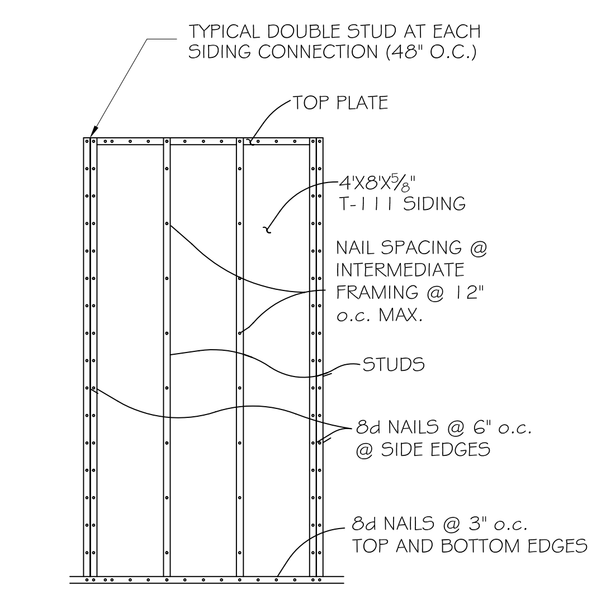

PLYWOOD SHEATHING PANELS SHALL OVERLAP THE TOP MEMBER AND THE BOTTOM PLATE BY 1 1/2" & A SINGLE ROW OF FASTENERS SHALL BE PLACED 3/4" FROM PANEL EDGE.

WALL SHEATHING ATTACHMENT
NTS

DAMMON ENGINEERING, INC.
Architects & Engineers
dammonengineering.com
dammon@dammon.net
PHONE: 985-649-5832
FAX: 985-641-5950
CHIEF ENGINEER: PAMETT DAMMON, P.E.
CHIEF ARCHITECT: ROBERT WILTSE
554 OLD SPANISH TRAIL
SLIDELL, LA 70458

The above drawings and specifications, designs and arrangements shown thereon are the property of Dammon Engineering, and no other person or firm may use the same in whole or in part or make in connection with any work or project other than the specified project for which they are prepared and developed without written consent of Dammon Engineering. Visual contact with these drawings or specifications shall constitute conclusive evidence of acceptance of these restrictions.

THE CHILL PAD
617 JEFFERSON TERRACE
NEW IBERIA, LA 70560

JOB No:	2148	DATE:	07-26-2012
DRAWN BY:	DPD	CHECKED BY:	DPD

REVISIONS

#	DESCRIPTION	DATE

STRUCTURAL PLAN

SHEET No: 4 OF 9

S-1