ELEVATION & SHELVING PLAN

SCALE : 1/2" = 1'-0"

THIS DRAWING IS AN INSTRUMENT OF SERVICE AND AS SUCH SHALL REMAIN THE PROPERTY OF HOTEL & RESTAURANT SUPPLY. UNAUTHORIZED USE OR REPRODUCTION WITHOUT PERMISSION OF HOTEL & RESTAURANT SUPPLY IS PROHIBITED. THIS DRAWING IS ONLY FOR USE IN CONNECTION WITH THIS PROJECT AND SHALL NOT BE USED FOR OTHER LOCATIONS.
COPYRIGHT 2008, HOTEL & RESTAURANT SUPPLY.

REVISIONS	BY
08/18/14	AD
08/22/14	AD

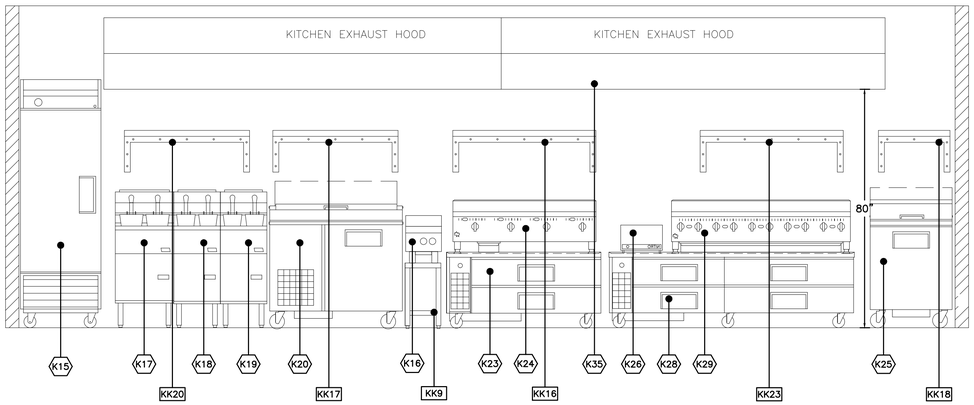

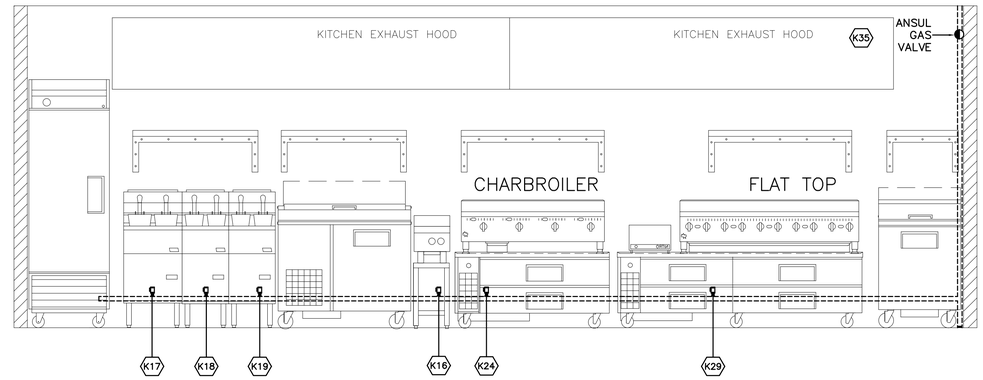

LEGEND

- J-BOX
- DUPLEX RECEPTACLE
- SINGLE RECEPTACLE
- DISCONNECT SWITCH
- DIRECT CONNECTION
- TERMINAL CABLE
- SWITCH

LEGEND

- COLD WATER
- HOT WATER
- DRAIN (VENT THRU ROOF)
- FLOOR DRAIN
- FLOOR SINK
- FLOOR TROUGH DRAIN
- MAIN GAS LINE
- GAS SHUTOFF

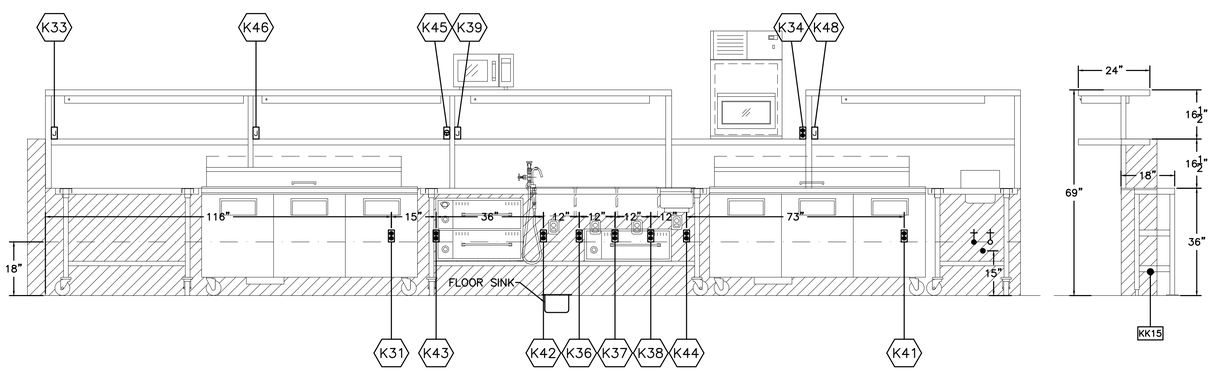

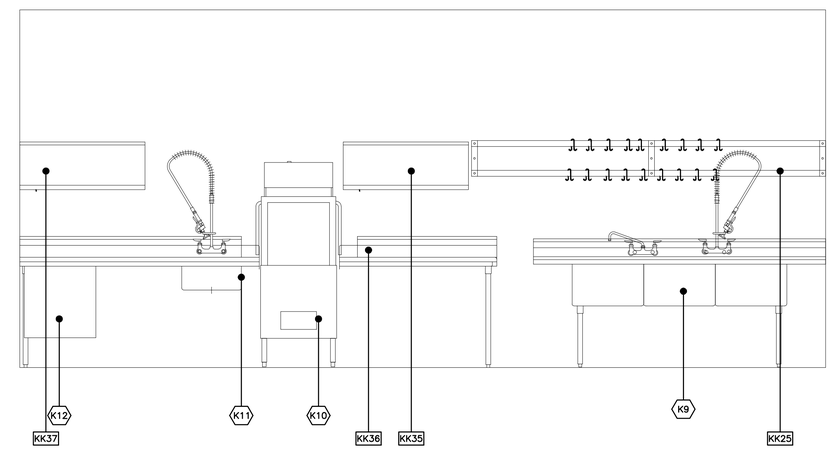

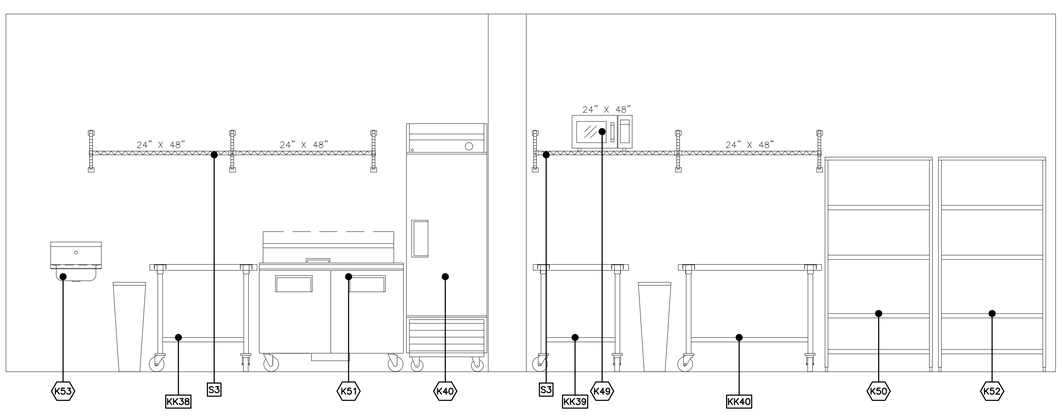

ITEM #S3 (24")
OVER PREP AREA

6	13 PDFK3 POST
4	1WS24K3
2	2WS24K3
4	2448NK3

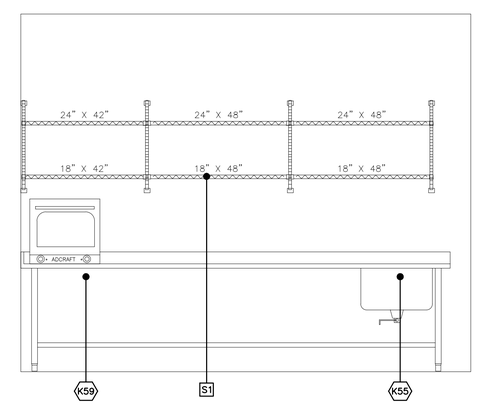

ITEM #S1 (18"/24")
OVER PREP TABLE

4	33PDFK3
2	1WS24K3
2	2WS24K3
2	1WS18K3
2	2WS18K3
2	2448NK3
2	1848NK3

FOOD SERVICE KITCHEN EQUIPMENT PLAN

MUGSHOT'S
RIDGELAND, MS.

Hotel & Restaurant Supply
Suppliers/Designers to the Food Service Industry
5020 Arundel Road Meridian, MS. 39307
601-482-7127 FAX 601-485-1140
email: adear@hnrsupply.com

DRAWN BY: A.DEAR	
DATE 07/29/14	
SCALE 1/2" = 1'-0"	
JOB#	
FILE	

FS-5