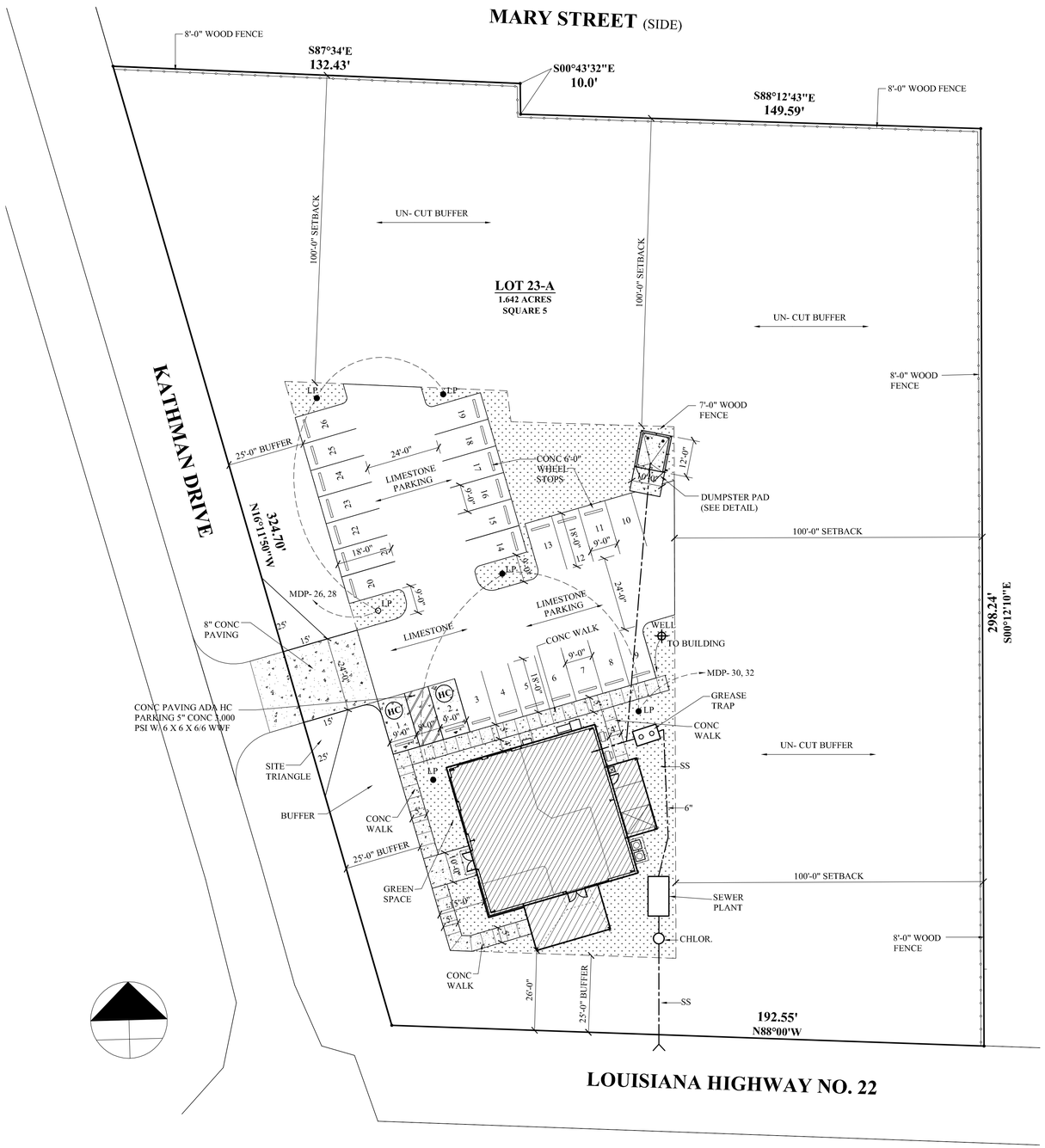

LOUISIANA HIGHWAY NO. 22

LOTS 23-4, SQUARE 5, LIVE OAK HILLS SUBDIVISION, IN SECTION 18, TOWNSHIP 7 SOUTH, RANGE 10, TAMMANY PARISH , LOUISIANA

SITE PLAN

SCALE: 1" = 20'-0"

SP-1

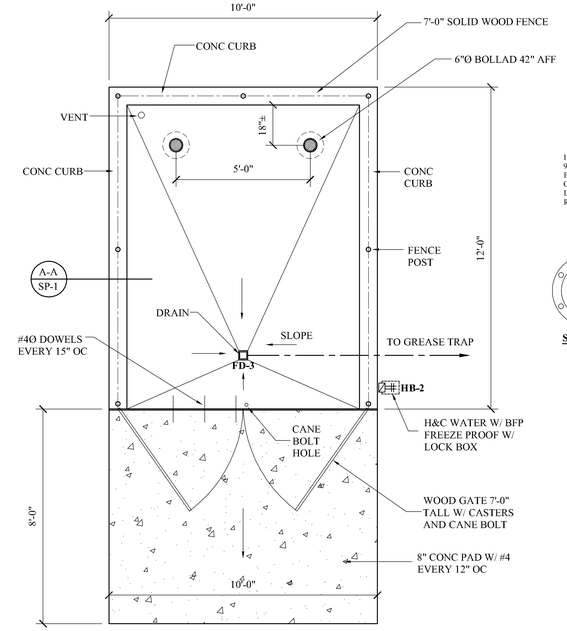

DUMPSTER PAD

SCALE: 3/8"=1-0"

SP-1

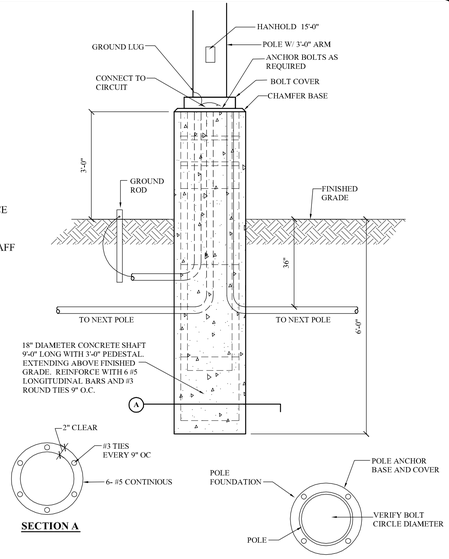

SITE LIGHT POLE DETAIL

NTS

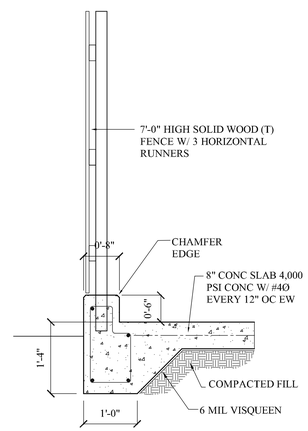

DETAIL

SCALE: 3/4"=1-0"

A-A
SP-1

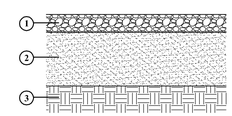

TYP AGGREGATE PARKING SECTION

NOT TO SCALE

LEGEND:

1. 4" (MIN) 610 LIMESTONE
2. 12" (MIN) SUBBASE, A-4 OR BETTER MATERIAL, COMPACTED TO 97% IN ACCORDANCE WITH DOTD DESIGNATION, TR418.
3. EXISTING INSITU SOIL.

NOTE: CONTRACTOR TO PROOF ROLL EX. BASE PRIOR TO PLACING GRAVEL AND GRADING. ANY SOFT AREAS ARE TO BE BROUGHT TO THE ATTENTION OF THE PROJECT ENGINEER PRIOR TO PREPARING, AFTER INITIAL. COMPACTION THE SURFACE SHALL BE WETTING AS NECESSARY AND ROLLED WITH A PNEUMATIC- TIRE OR STEEL- WHEEL ROLLER TO A TIGHT UNIFORM SURFACE.

BASE PREPARATION:

1. UNLESS OTHERWISE NOTED, ALL WORK AND MATERIAL. TO BE IN COMPLIANCE WITH LOUISIANA DEPARTMENT OF TRANSPORTATION STANDARD SPECIFICATIONS FOR ROADS AND BRIDGES, 2000 EDITION SECTION 201, UNLESS OTHERWISE NOTED.
2. GRUB BASE MATERIAL TO A MIN. DEPTH OF 12".
3. EXISTING EARTHEN MATERIAL TO REMAIN SHALL BE SCARIFIES FOR THE FULL PARKING AREA AND A MINIMUM DEPTH OF 6 INCHES, SHAPED TO THE REQUIRED SECTION AND UNIFORMLY COMPACTED TO AT LEAST 100% FOR BASE, AS DETERMINED BY DOTD DESIGNATIONS: TR4158.
4. THE SCARIFIED, SHAPED AND COMPACTED BASE SHALL HAVE A SMOOTH, UNIFORM, CLOSELY KNIT SURFACE, FREE FROM RIDGES, WAVES, DEPRESSIONS OR LOOSE MATERIAL, PRIOR TO PLACEMENT OF GRAVEL.

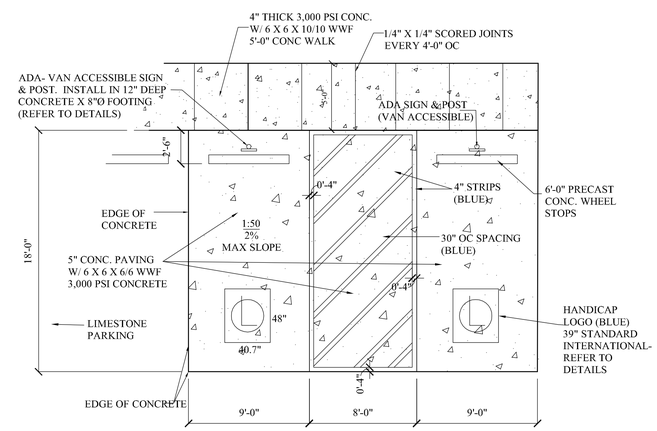

HANDICAP PAVING DETAIL

SCALE: 3/16"=1-0"

SP-1

THESE DESIGN AND CONSTRUCTION DOCUMENTS AT THE SOLE PROPERTY OF JOSEPH F. SCHNEIDER, JR. AIA, ARCHITECT. NO USE OR REPRODUCTION OF THESE DOCUMENTS OR PARTIAL USE OR PARTIAL REPRODUCTION IS ALLOWED. NO USE OF THESE DRAWINGS WITHOUT THE WRITTEN EXPRESSED PERMISSION OF JOSEPH F. SCHNEIDER, JR. ARCHITECT IS ALLOWED.

REVISIONS	BY
1 10/21/2019	JFS

NEW RESTAURANT FOR HABANERO'S MEXICAN KITCHEN
1938 LA HWY 22 WEST
MADISONVILLE, LOUISIANA 70447

JOSEPH F. SCHNEIDER JR., AIA
ARCHITECT
105 EVANGELINE DRIVE, SLIDELL, LOUISIANA 70460
(985) 847-0714
jfsarchitect@charter.net

DRAWN	H. SCHNEIDER
CHECKED	J. SCHNEIDER
DATE	08/29/2019
SCALE	AS NOTED
JOB NO.	
SHEET	SP-1
OF	SHEETS