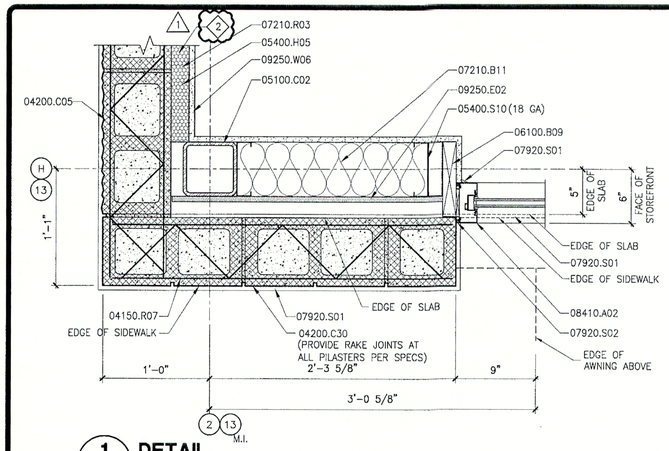

1 DETAIL 1A1.1 — 1 1/2" = 1'-0"

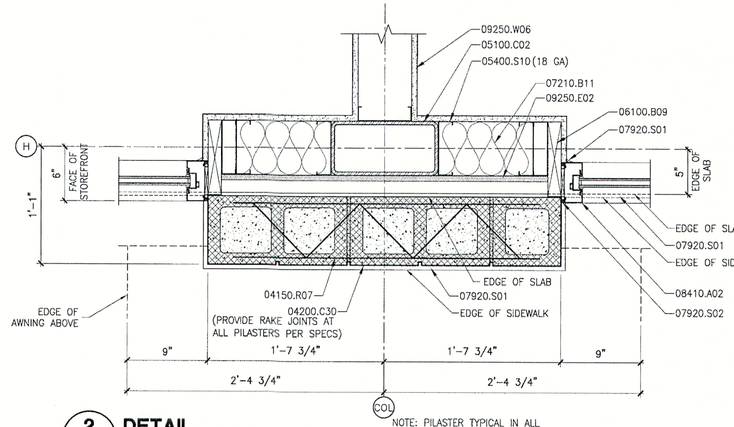

2 DETAIL 1A1.1 — 1 1/2" = 1'-0"

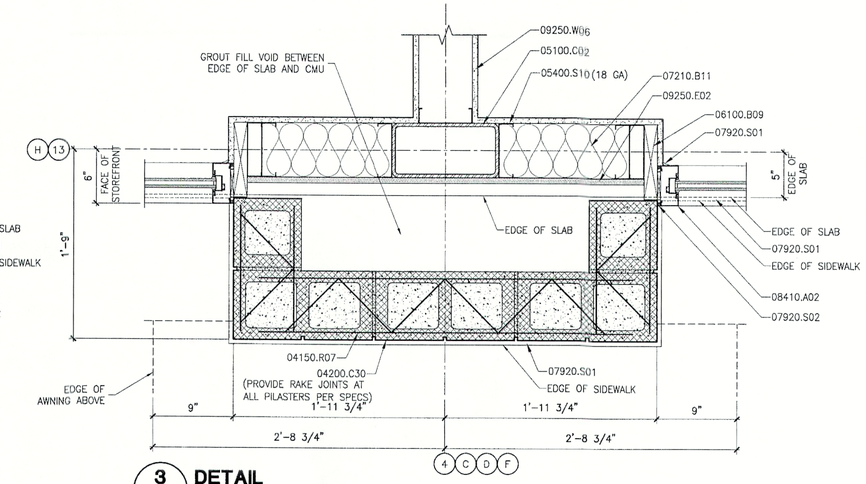

3 DETAIL 1A1.1 — 1 1/2" = 1'-0"

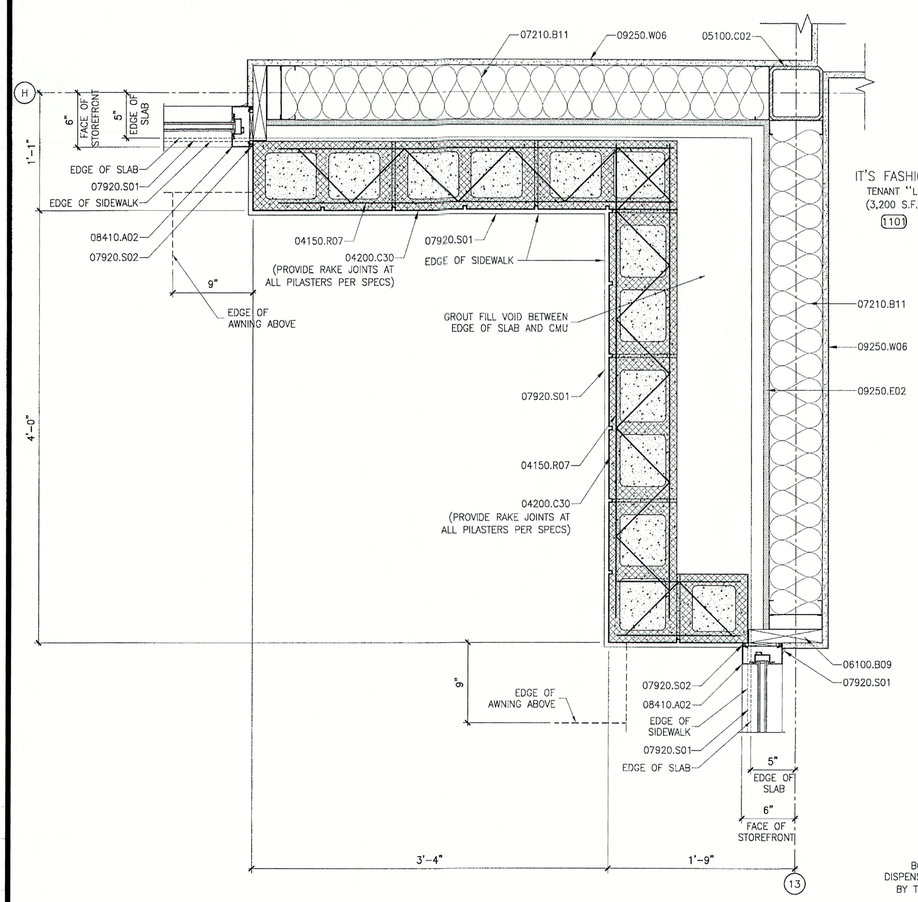

4 DETAIL 1A1.1 — 1 1/2" = 1'-0"

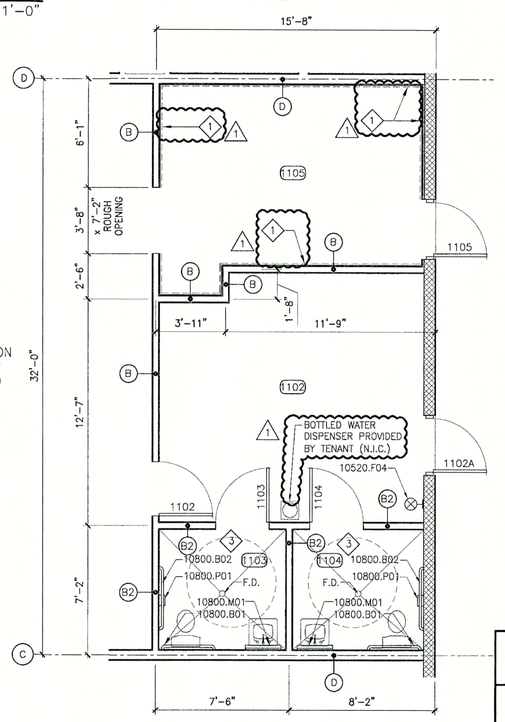

6 ENLARGED PLAN 1A1.1 — IT'S FASHION — 1/4" = 1'-0"

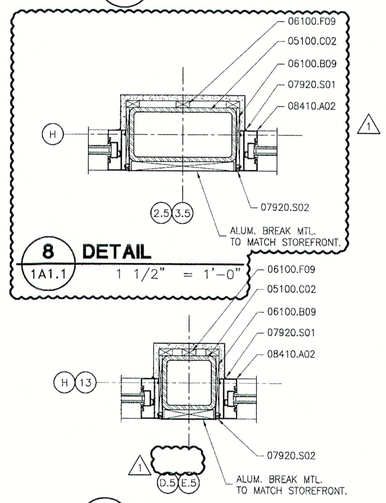

8 DETAIL 1A1.1 — 1 1/2" = 1'-0"

5 DETAIL 1A1.1 — 1 1/2" = 1'-0"

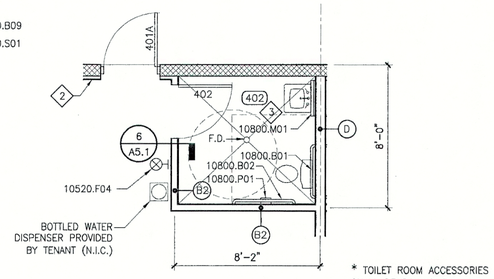

* TOILET ROOM ACCESSORIES SHALL BE SIMILAR FOR EACH TOILET ROOM PROVIDED

7 ENLARGED PLAN 1A1.1 — RESTROOMS — 1/4" = 1'-0"

(TYP @ ROOMS 202, 302, 402, 502, 602, 603, 702, 802, AND 803)

9 PARTITION TYPES

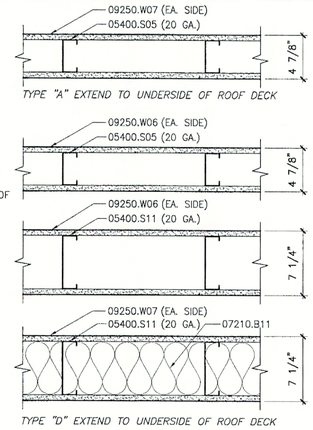

NOTE: IF REQUIRED BY STATE OR LOCAL JURISDICION PROVIDE ONE EXTRA LAYER OF 5/8" GYPSUM BOARD ON EACH SIDE OF DEMISING WALLS AT TENANTS WITH 400 AMP ELECTRICAL SERVICE.

10 KEYNOTES

04150.R07	8" GALV TRUSS TYPE REINF @ 16" O.C. HORIZ.
04200.C05	8 x 8 x 16 C.M.U., SPLIT FACED, RUNNING BOND
04200.C30	8 x 8 x 16 C.M.U., SMOOTH FACED, SCORED, RUNNING BOND
05100.C02	STEEL TUBE COLUMN, SEE STRUCTURAL
05400.H05	2" MTL. HAT CHANNEL @ 16" O.C.
05400.S05	3-5/8" MTL. STUD @ 24" O.C., GAUGE AS SHOWN IN PARENTHESIS
05400.S10	6" MTL. STUD @ 16" O.C., GAUGE AS SHOWN IN PARENTHESIS
05400.S11	6" MTL. STUD @ 24" O.C., GAUGE AS SHOWN IN PARENTHESIS
06100.B09	WOOD BLOCKING AS REQ'D
06100.F09	WOOD FURRING AS REQ'D @ 12" O.C.
07210.B11	BATT INSULATION: 5-1/2" THICK, R-19, KRAFT-FACED
07210.R03	RIGID INSULATION, 1-1/2" THICK
07920.S01	FLEXIBLE SEALANT
07920.S02	FLEXIBLE SEALANT W/ BACKER ROD
08410.A02	ALUM. STOREFRONT FRAMING COMPONENT
09250.E02	5/8" EXTERIOR GYPSUM SHEATHING, GLASS MAT FACING
09250.W06	5/8" GYPSUM BOARD
09250.W07	5/8" FIRE-RATED GYPSUM BOARD
10520.F04	FIRE EXT. W/WALL HOOK
10800.B01	36" x 1-1/4" DIA GRAB BAR
10800.B02	42" x 1-1/4" DIA GRAB BAR
10800.M01	MIRROR: 24" x 36"; FRAMED, WITH SHELF
10800.P01	TOILET PAPER HOLDER

11 SPECIFIC NOTES

1. INTERIOR WALLS IN FITTING ROOMS NOTED TO RECEIVE 3/8" OSB PLYWOOD FLOOR TO CEILING ON FITTING ROOM SIDE BETWEEN STUDS AND DRYWALL TYPICAL CONTINUOUS IN LOCATIONS NOTED. FURR WITH 7/8" HAT CHANNELS AT CMU WALLS.
2. INSTALL 5/8" GYPSUM BOARD ON 2" METAL HAT CHANNEL @ 16" O.C. ON MASONRY WALLS NOTED.
3. 2% MAX. SLOPE FOR RESTROOM FLOOR DRAINAGE.

12 GENERAL NOTES

1. BOTTLED WATER DISPENSER PROVIDED BY TENANT. (N.I.C.)
2. EXTEND GYP. BD. TO METAL DECK IN ALL AREAS WITHOUT CEILINGS. IN AREAS WITH CEILINGS INSTALL GYP. BD. 6" ABOVE CEILING HEIGHT.

DATE	DESCRIPTION	BY
9/17/07	REV #1	LMR

REVISION

DDG DUPLANTIS DESIGN GROUP, PC
Respect • Integrity • Client Satisfaction • Excellence
THIBODAUX MANDEVILLE HOUSTON
Civil Engineering • Site Development • Land Planning • Public Works • Architecture
314 East Bayou Road
Thibodaux, Louisiana 70301
Phone: 985.447.0090
Fax: 985.447.7009

SIGNATURE: 9/12/07 DATE:

STAMP: STEPHEN M. VICKNERE, P.E. No. 31312 — STATE OF LOUISIANA — REGISTERED PROFESSIONAL ENGINEER; ARCHITECT

PROPOSED RETAIL DEVELOPMENT
CITY OF BOUTTE
ST. CHARLES PARISH, LOUISIANA

FOR THE SPECTRA GROUP, INC.
MEMPHIS, TENNESSEE

DRAWN	LMR
CHECKED	SMV
DATE	8/13/07
SCALE	AS NOTED ON DWG
PROJECT NO.	07-205A
FILE:	REVISION 1\A1-2.DWG
SHEET	A1.2