REFER TO PANELBOARD SCHEDULES FOR FAULT CURRENTS AND AIC RATINGS.

THE CALCULATED AVAILABLE FAULT CURRENT IS 22,292 AMPS. SHORT CIRCUIT VALUES ARE BASED ON INFINITE BUS, IMPEDENCE OF 4%, A 300KVA PAD MOUNTED UTILITY TRANSFORMER, AND SERVICE ENTRANCE LATERAL LENGTH OF 65'-0". COORDINATE WITH ELECTRICAL UTILITY COMPANY AND CIVIL DRAWINGS. ADJUST THE AIC RATING OF ALL PANELBOARDS IF THE ACTUAL AVAILABLE FAULT CURRENT FROM THE UTILITY COMPANY IS GREATER THAN THE CALCULATED VALUE. DO NOT REDUCE AIC RATINGS IF LESS THAN CALCULATED VALUE.

COORDINATE CONDUIT AND CONDUCTOR TERMINATION REQUIREMENTS AT THE TRANSFORMER WITH THE LOCAL ELECTRIC UTILITY COMPANY.

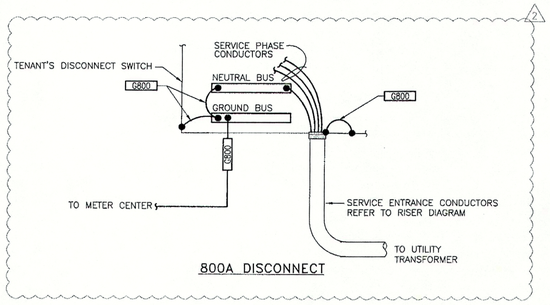

800A DISCONNECT

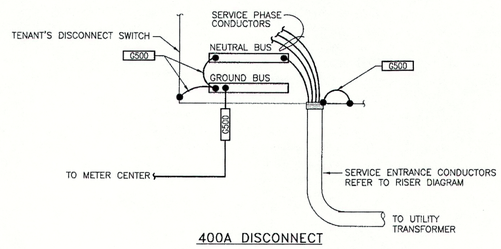

400A DISCONNECT

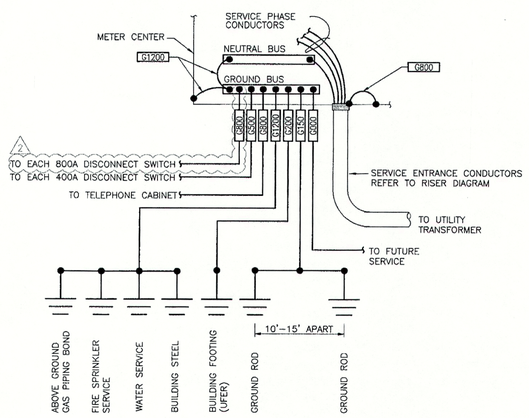

3 SERVICE GROUNDING DETAIL FOR METER CENTERS#1 & #2
NOT TO SCALE

CIRCUIT SCHEDULE:

ALL CONDUCTOR SIZES ARE BASED ON 75 DEG C RATED TERMINATION AND COPPER CONDUCTORS WITH TYPE THHN/THWN-2 INSULATION. WHERE ALUMINUM CONDUCTORS ARE ALLOWED PER SPECIFICATIONS AND FOR TERMINATION OR INSULATION TYPES RATED LESS THAN 75 DEG C, MODIFY SIZES ACCORDING TO NFPA 70.

C20	2" EMPTY CONDUIT
204	200A, (4)#3/0, (1)#6G, 2" C
224	225A, (4)#4/0, (1)#4G, 2-1/2" C
404	400A, (2) 2" C, EACH W/ (4)#3/0, (1)#3G
804	800A, (3) 3" C, EACH W/ (4)-300kcmil, (1) #2/0G
G000	1" CONDUIT FOR FUTURE GROUND
G1200	GND, #3/0 COPPER GROUND, 1" C
G150	GND, #6 COPPER GROUND, 3/4" C
G200	GND, #4 COPPER GROUND, 3/4" C
G500	GND, #1/0 COPPER GROUND, 1" C
G800	GND, #2/0 COPPER GROUND, 1" C
S1004	1000A, (3) 3" C, EACH W/ (4)-400kcmil
S404	400A, (2) 2" C, EACH W/ (4)#3/0
S804	800A, (3) 3" C, EACH W/ (4)-300kcmil
V204	200A, (4)#4/0, (1)#4G, 2-1/2" C

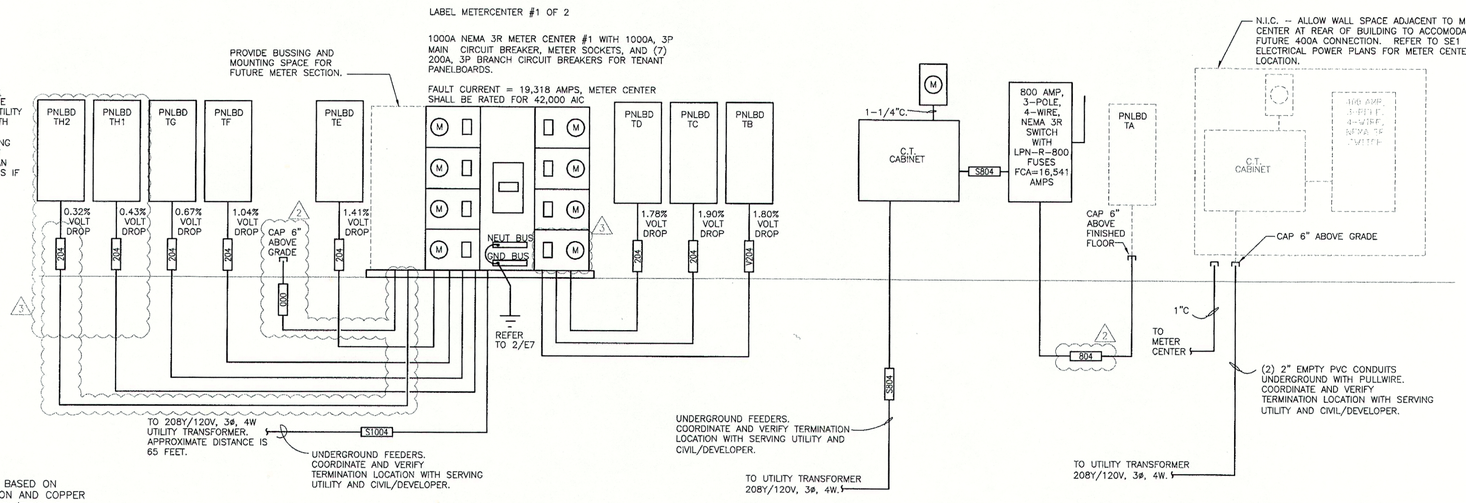

2 ELECTRICAL RISER DIAGRAM METER CENTER #1
NO SCALE

METER CENTER #1 ELECTRICAL SERVICE LOAD SUMMARY			
BUILDING OCCUPANCY TYPE: M		SERVICE DESCRIPTION: 208Y/120V, 3PH, 4W	
BUILDING SQUARE FOOTAGE: 19,040			
LOAD DESCRIPTION	Connected KVA	Demand FACTOR	Demand KVA
HVAC - SUMMER	86.69	100%	86.69
HVAC - WINTER	0.00	100%	0.00
LIGHTING (PER NEC-220)	57.12	125%	71.40
RECEPTACLES	15.66	100%;50%	12.83
MOTOR LOADS	18.21	100%	18.21
LARGEST MOTOR LOAD	3.96	125%	4.95
SUPPLEMENTAL ELECTRIC HEAT	16.48	100%	16.48
MISCELLANEOUS EQUIPMENT	6.46	100%	6.46
SHOW WINDOW / TRACK LIGHTING	36.30	PER NEC	45.38
TOTAL LOAD	240.87	KVA	262.39
TOTAL AMPACITY	668.59	AMPS	728.32
SERVICE AMPACITY	1000	AMPS	1000.00
SPARE CAPACITY		AMPS	272

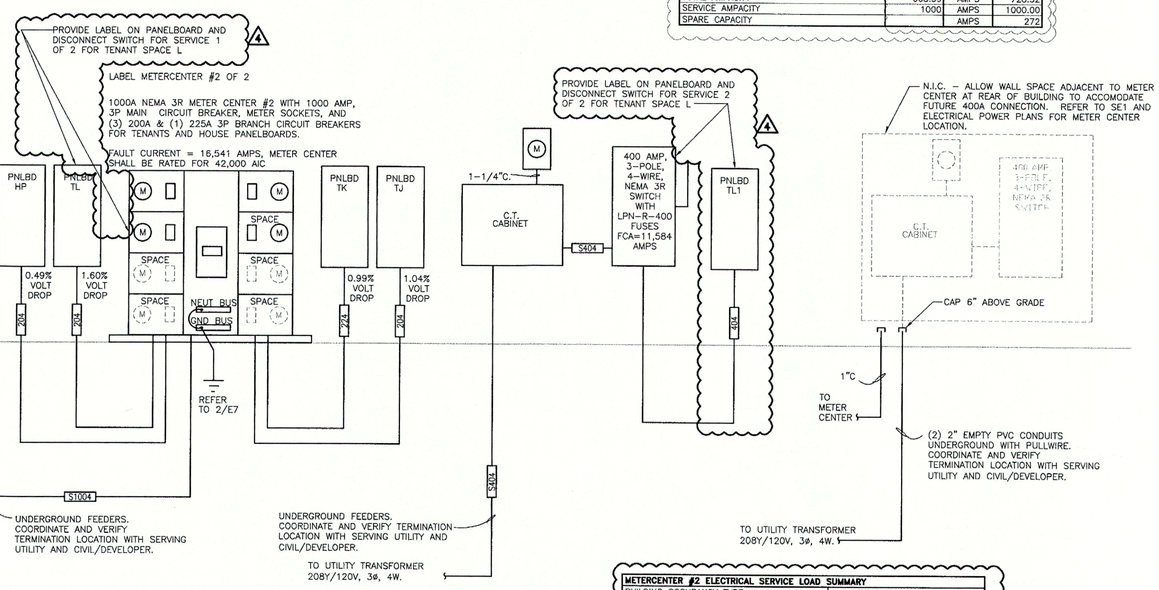

1 ELECTRICAL RISER DIAGRAM METER CENTER #2
NO SCALE

METERCENTER #2 ELECTRICAL SERVICE LOAD SUMMARY			
BUILDING OCCUPANCY TYPE: M		SERVICE DESCRIPTION: 208Y/120V, 3PH, 4W	
BUILDING SQUARE FOOTAGE: 10,500			
LOAD DESCRIPTION	Connected KVA	Demand FACTOR	Demand KVA
HVAC - SUMMER	66.26	100%	66.26
HVAC - WINTER	0.00	100%	0.00
LIGHTING (PER NEC-220)	31.50	125%	39.38
RECEPTACLES	9.30	100%;50%	9.30
MOTOR LOADS	12.39	100%	12.39
LARGEST MOTOR LOAD	3.96	125%	4.95
SUPPLEMENTAL ELECTRIC HEAT	4.50	100%	4.50
MISCELLANEOUS EQUIPMENT	5.67	100%	5.67
DISPLAY CASE/SIGNAGE	30.00	125%	37.50
SHOW WINDOW / TRACK LIGHTING	23.95	PER NEC	29.15
EXTERIOR LIGHTING	15.93	125%	19.91
TOTAL LOAD	203.46	KVA	229.01
TOTAL AMPACITY	564.76	AMPS	635.67
SERVICE AMPACITY	1000	AMPS	1000.00
SPARE CAPACITY		AMPS	364

HENDERSON ENGINEERS INC
8325 LENEXA DRIVE
LENEXA, KS 66214
TEL 913 742 5000 FAX 913 742 5001
www.hel-eng.com
0750001106

DATE	DESCRIPTION	BY
3/04/08	REVISION #3	FLS
6/05/08	REVISION #4	FLS
2/04/08	REVISION #5	FLS
03/13/09	REVISION #6	DWL

REVISION

DDG DUPLANTIS DESIGN GROUP, PC
Respect • Integrity • Client Satisfaction • Excellence
THIBODAUX MANDEVILLE HOUSTON
Civil Engineering • Site Development • Land Planning • Public Works • Architecture
314 East Bayou Road
Thibodaux, Louisiana 70301
Phone: 985.447.5020
Fax: 985.447.5029

SIGNATURE:

DATE:

STAMP

STATE OF LOUISIANA
CRAIG R. LANDRY
REG. No. 26558
REGISTERED PROFESSIONAL ENGINEER IN ELECTRICAL ENGINEERING
3-12-09

PROPOSED RETAIL DEVELOPMENT
CITY OF BOUTTE
ST. CHARLES PARISH, LOUISIANA

FOR THE SPECTRA GROUP, INC.
MEMPHIS, TENNESSEE

DRAWN	FLS
CHECKED	MM
DATE	8/13/07
SCALE	AS NOTED ON DWG
PROJECT NO.	0750001106
FILE	0750001106E7.DWG
SHEET	E7

G:\Programs\Duplantis\0750001106 Spectra Retail Center - Boutte - LA\000\Elec\0750001106E7.dwg, Plot, 3/12/2009 4:02:31 PM, cheyenmarmore, 1:1