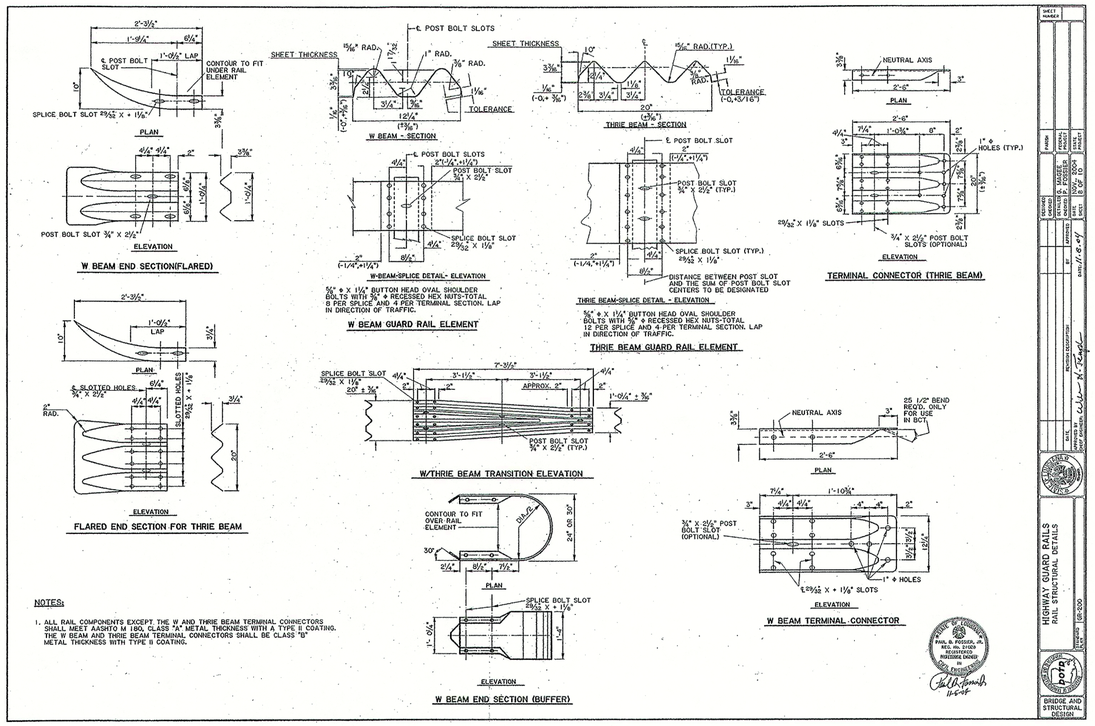

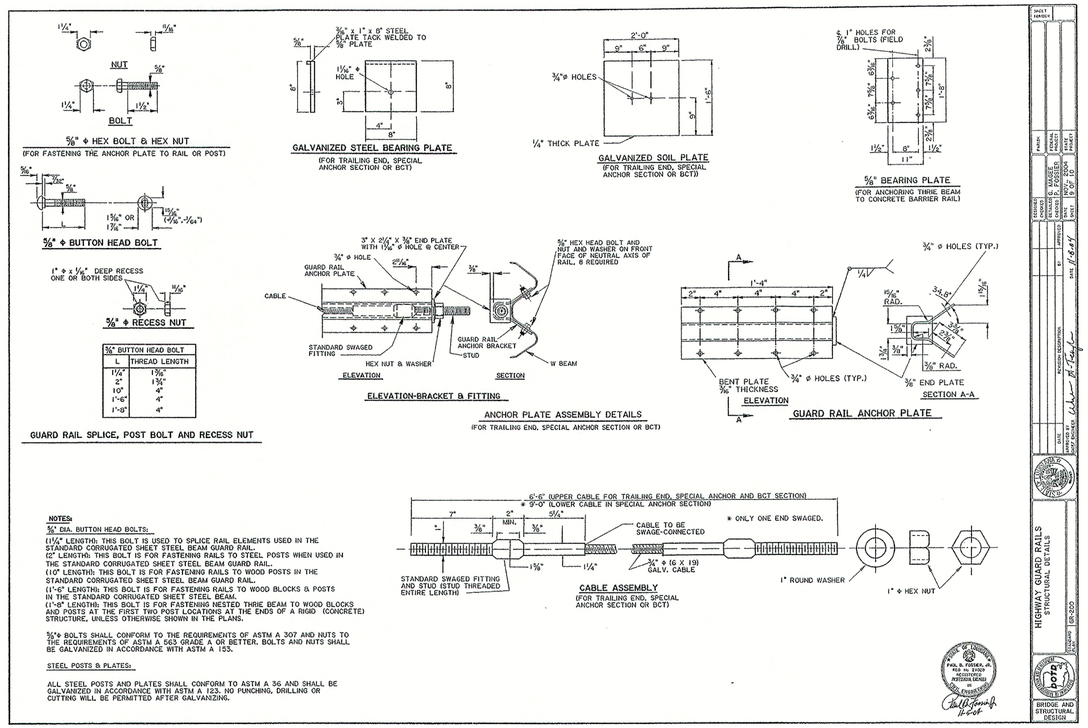

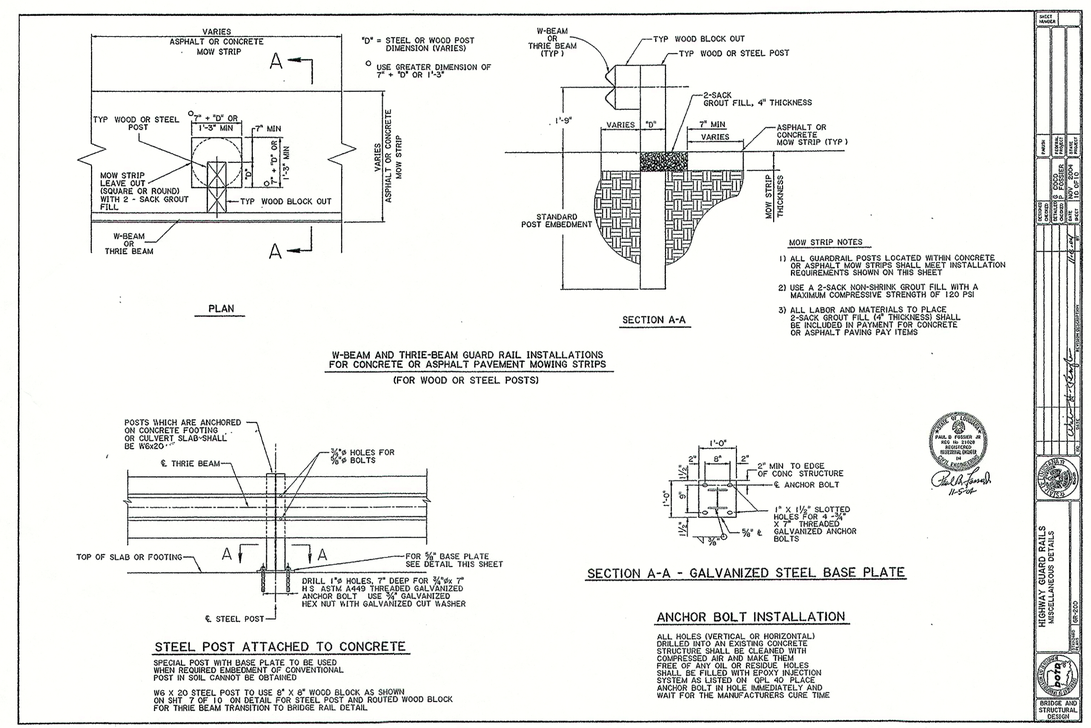

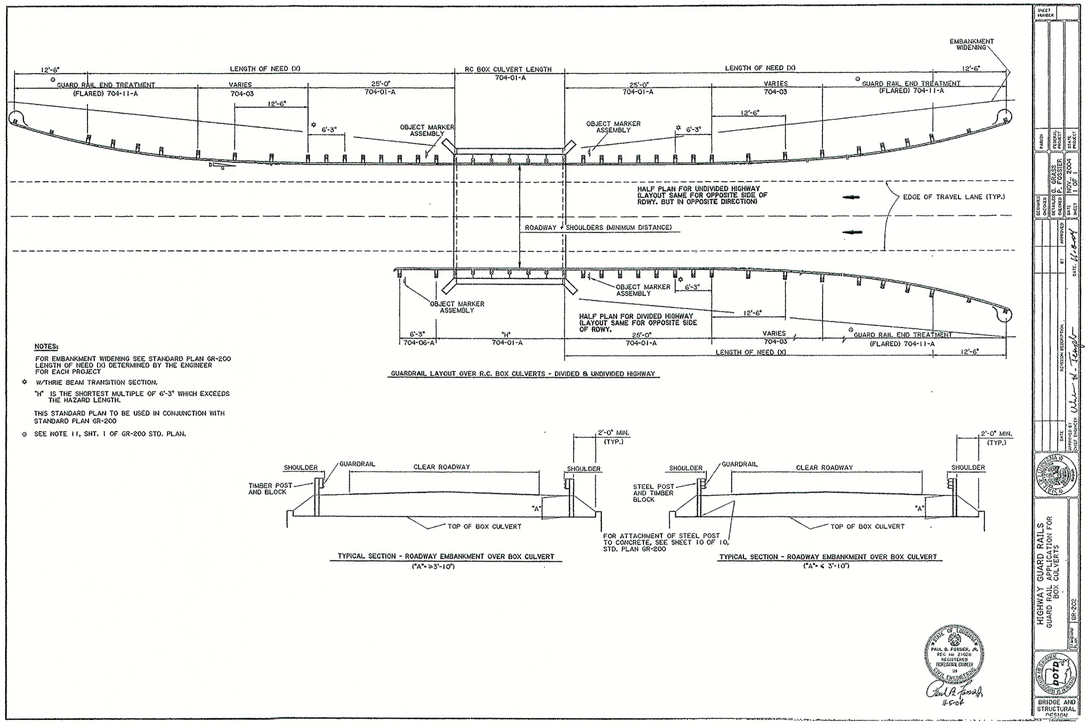

DETAIL SHEET

DATE	DESCRIPTION	BY

REVISION

DDG DUPLANTIS DESIGN GROUP, PC
Respect • Integrity • Client Satisfaction • Excellence
THIBODAUX MANDEVILLE HOUSTON
Civil Engineering • Site Development • Land Planning • Public Works • Architecture
733 N. Causeway Boulevard - Suite 201
Mandeville, Louisiana 70448
Phone: 985.626.9547
Fax: 985.626.0269

SIGNATURE:

DATE:

STAMP

PROPOSED RETAIL DEVELOPMENT
CITY OF BOUTTE
ST. CHARLES PARISH, LOUISIANA
FOR THE SPECTRA GROUP, INC.
MEMPHIS ,TENNESSEE

DRAWN	NMO
CHECKED	THB
DATE	8-10-07
SCALE	AS SHOWN
PROJECT NO.	07-205
FILE:	07-205 D1
SHEET	C-15