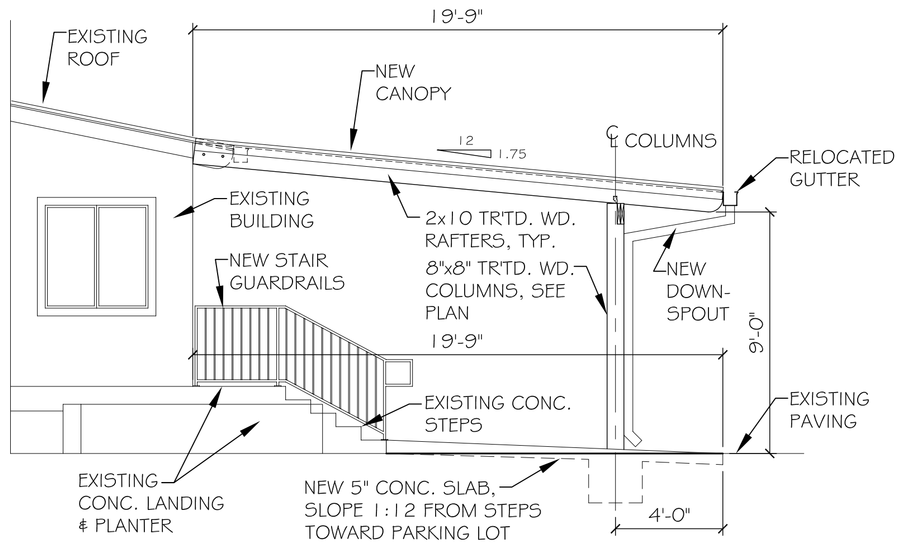

WEST SIDE ELEVATION

SCALE: 1/4"= 1'-0"

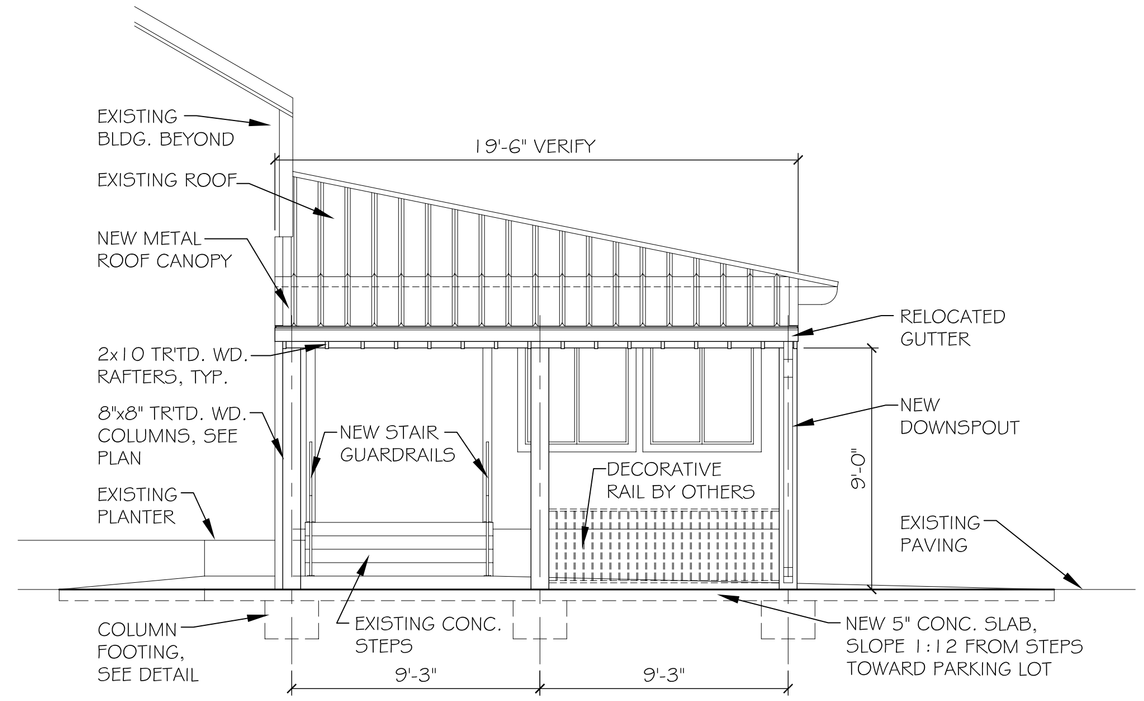

NORTH END ELEVATION

SCALE: 1/4"= 1'-0"

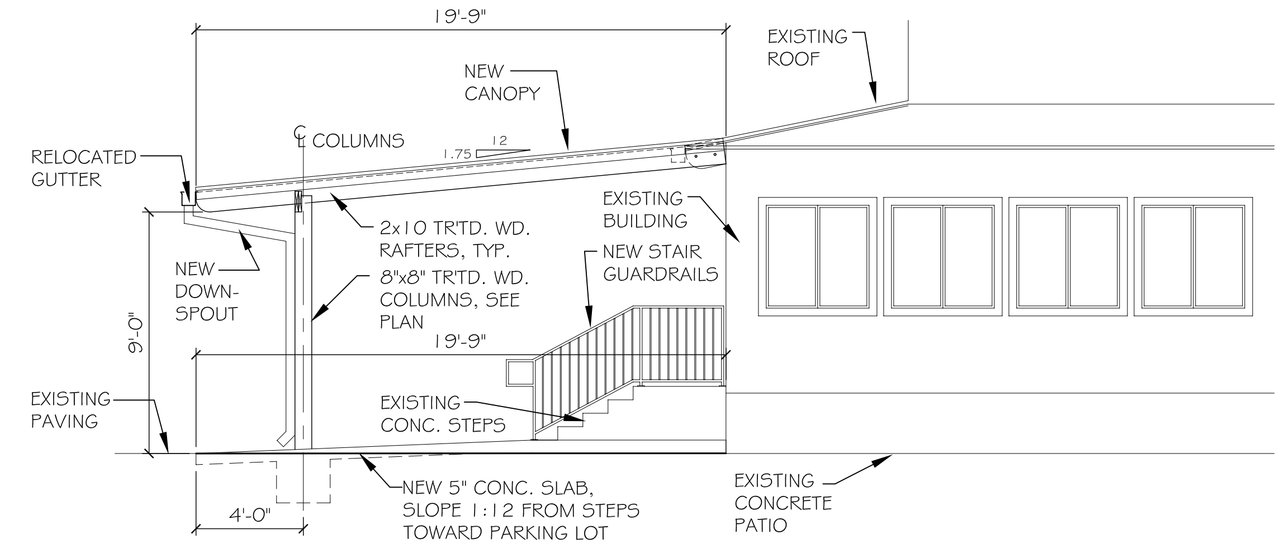

EAST SIDE ELEVATION

SCALE: 1/4"= 1'-0"

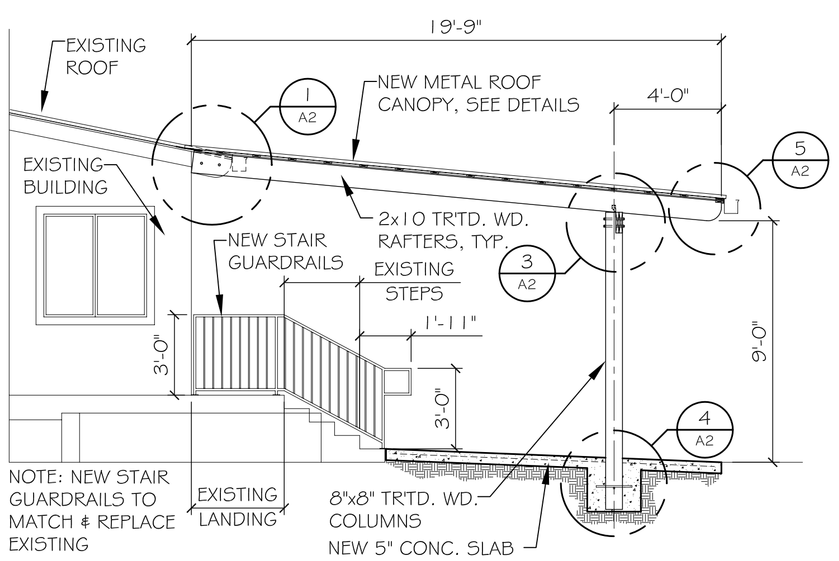

SECTION - A

SCALE: 1/4"= 1'-0"

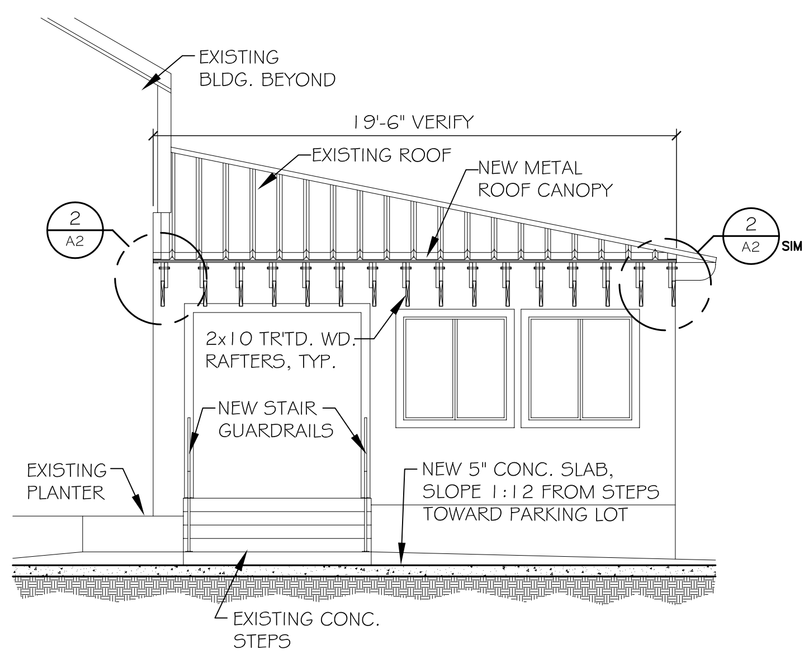

SECTION - B

SCALE: 1/4"= 1'-0"

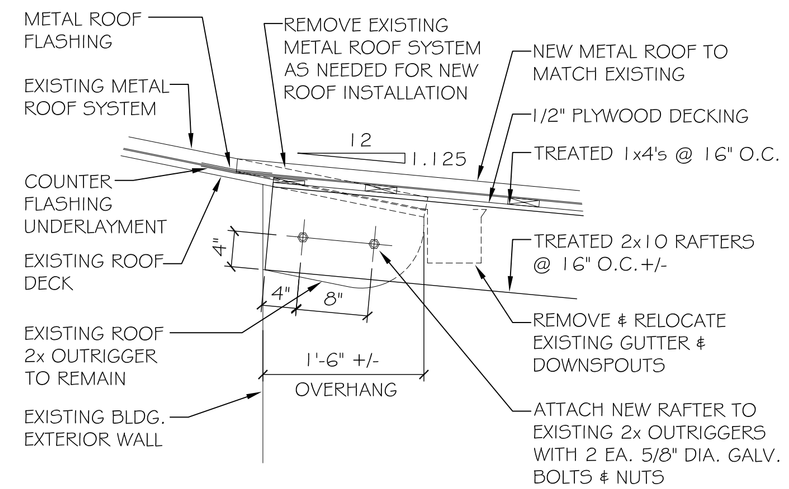

DETAIL - 1 (CONNECTION AT BLDG.)

SCALE: 1"= 1'-0"

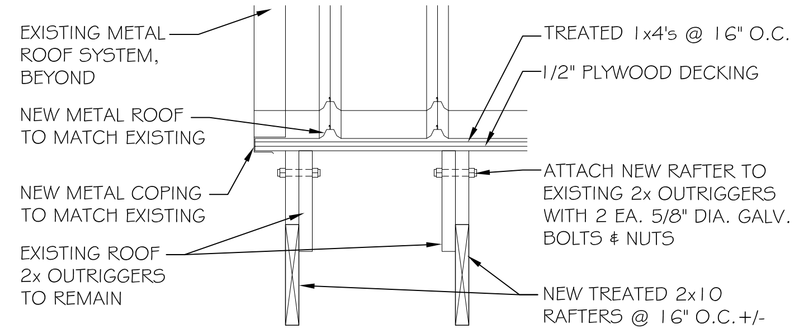

DETAIL - 2 (CONNECTION AT BLDG.)

SCALE: 1"= 1'-0"

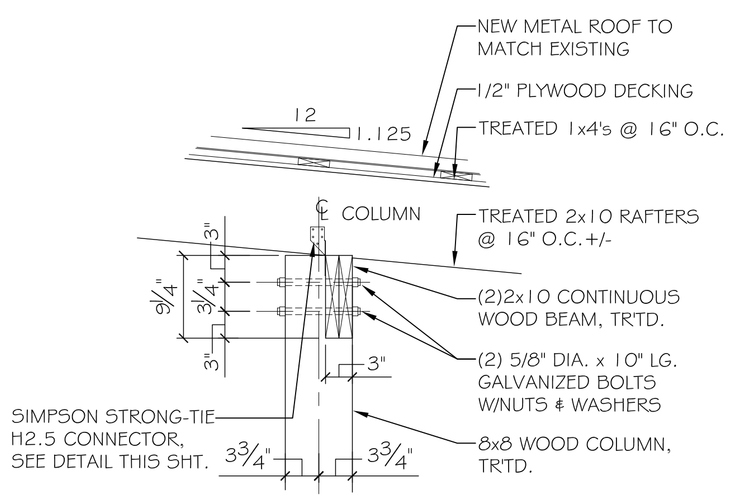

DETAIL - 3 (CONNECTION AT COLUMNS)

SCALE: 1"= 1'-0"

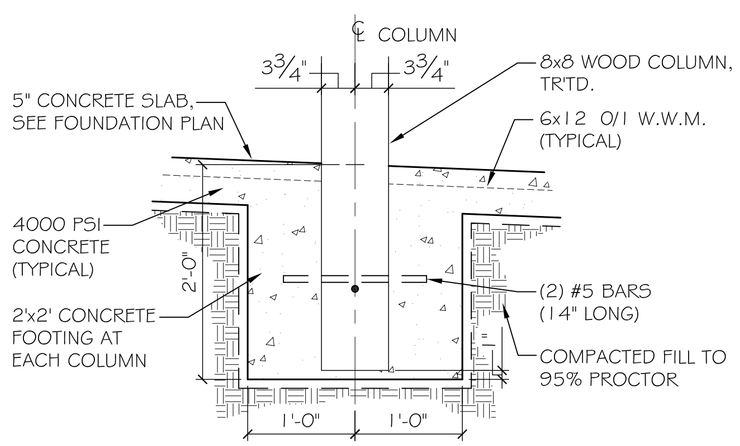

DETAIL - 4 (COLUMN FOUNDATION)

SCALE: 1"= 1'-0"

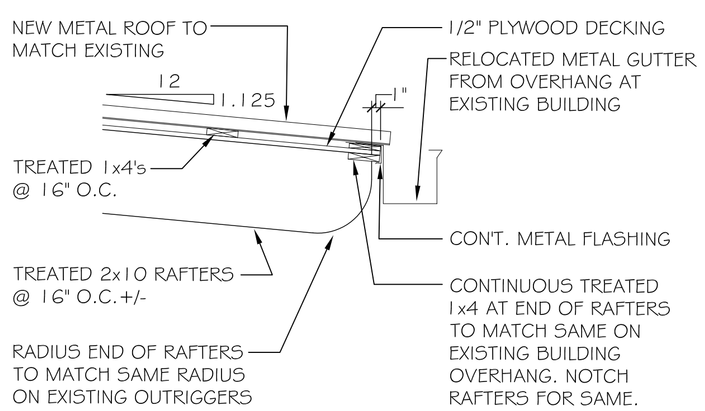

DETAIL - 5 (END OF RAFTERS)

SCALE: 1"= 1'-0"

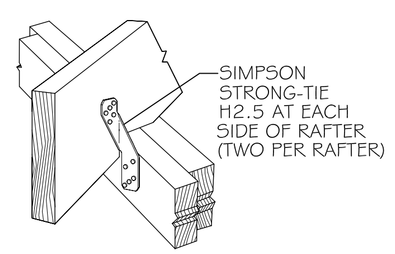

DETAIL - 6 (RAFTER TO BEAM CONNECTION)

SCALE: N.T.S.

DAMMON ENGINEERING, INC.
Architects & Engineers
dammonengineering.com
dammon@dammon@bellsouth.net
PHONE: 985-641-5932
FAX: 985-641-5950
CHIEF ENGINEER: BRIAN WISTICH P.E.
CHIEF ARCHITECT: KEVIN KINCHEN
554 OLD SPANISH TRAIL
SLIDELL, LA 70458

SOUTHSIDE CAFE'S NEW CANOPY & FOUNDATION

3154 FONTCHARTRAIN DRIVE
SLIDELL, LOUISIANA 70458

JOB No: 2207
DATE: 03-21-2014
DRAWN BY: JTL
CHECKED BY: CKD

The above design and specifications, plans and specifications are the property of Dammon Engineering and shall remain the property of Dammon Engineering, and no part thereof shall be copied, disclosed to others, or used in connection with any work or project other than the specified project for which it is prepared and delivered. Written consent of Dammon Engineering and Dammon Engineering retains the ownership of all such drawings and specifications and shall be returned upon request. Dammon Engineering, Inc. reserves the right to withdraw its evidence of acceptance of these restrictions.

#	DESCRIPTION	DATE

REVISIONS

ELEVATIONS, SECTIONS, AND DETAILS

SHEET No: 2 OF 2

A2