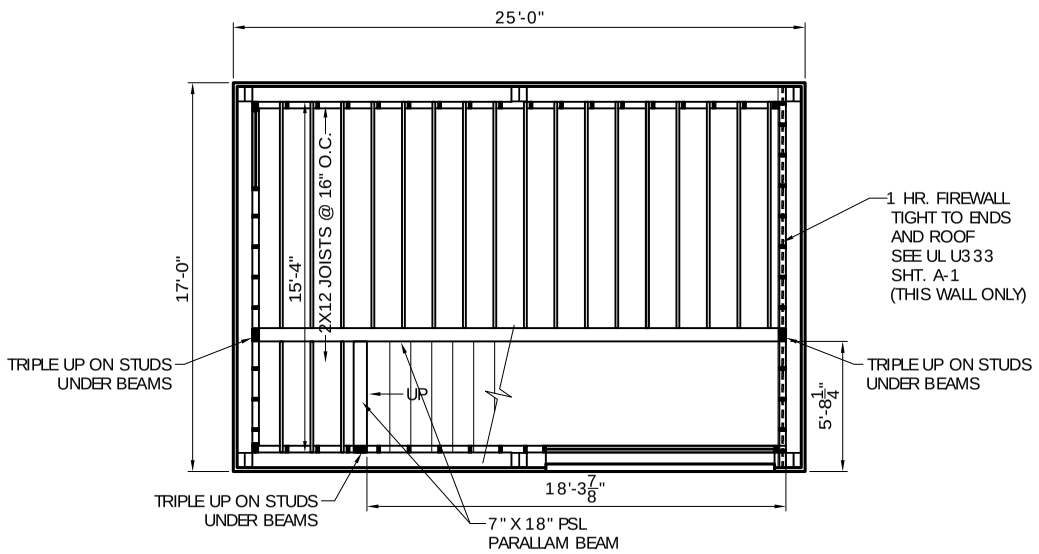

SECOND FLOOR FRAMING PLAN

SCALE: 1/4"= 1'-0"

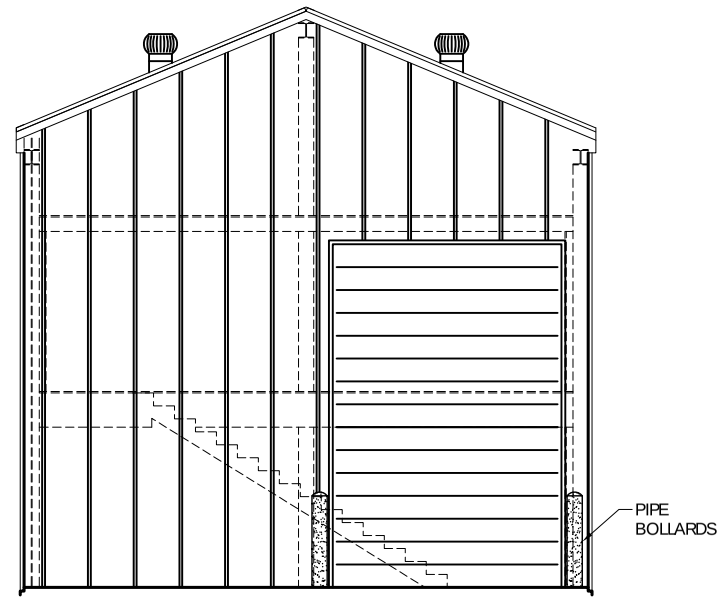

EAST ELEVATION

SCALE: 1/4"= 1'-0"

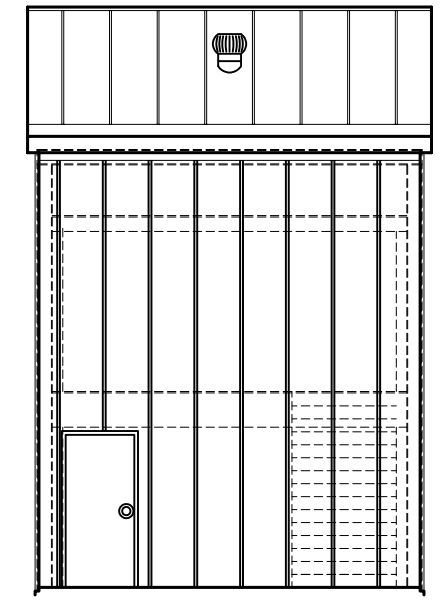

SOUTH ELEVATION

SCALE: 1/4"= 1'-0"

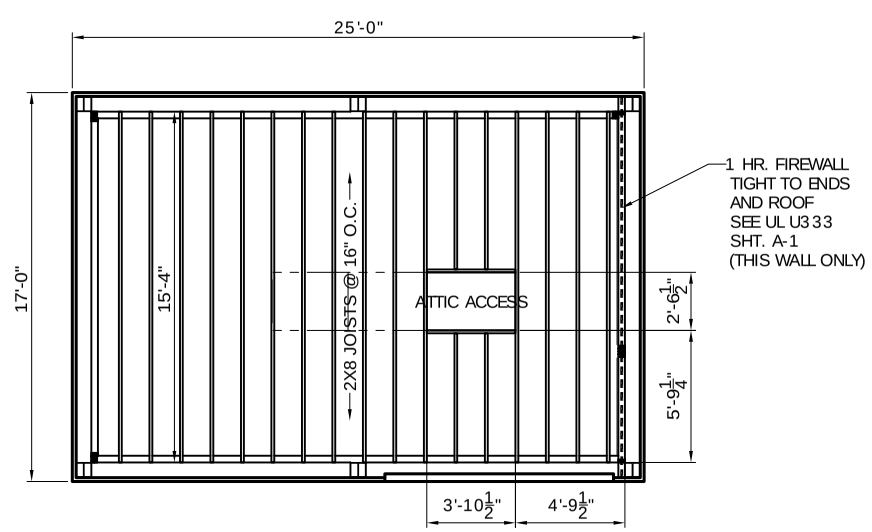

CEILING FRAMING PLAN

SCALE: 1/4"= 1'-0"

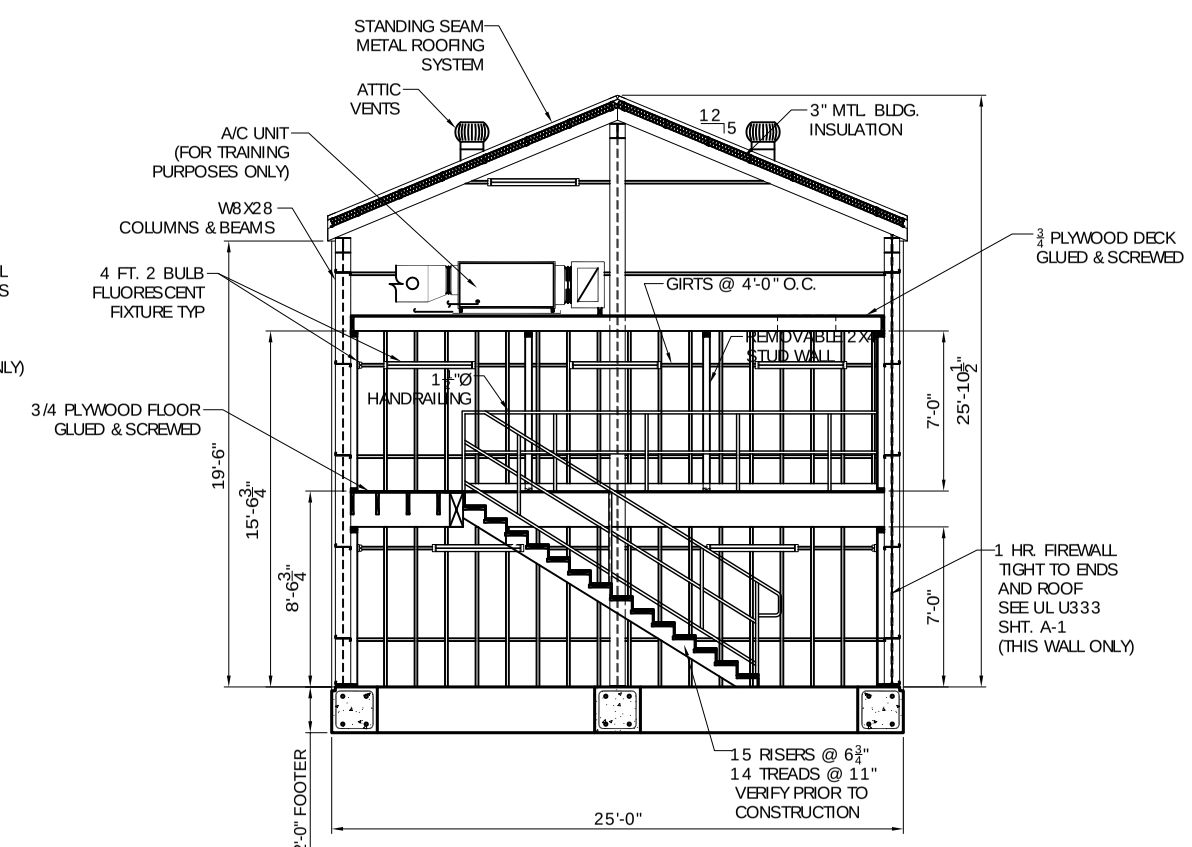

SECTION A

SCALE: 1/4"= 1'-0" A1 A2

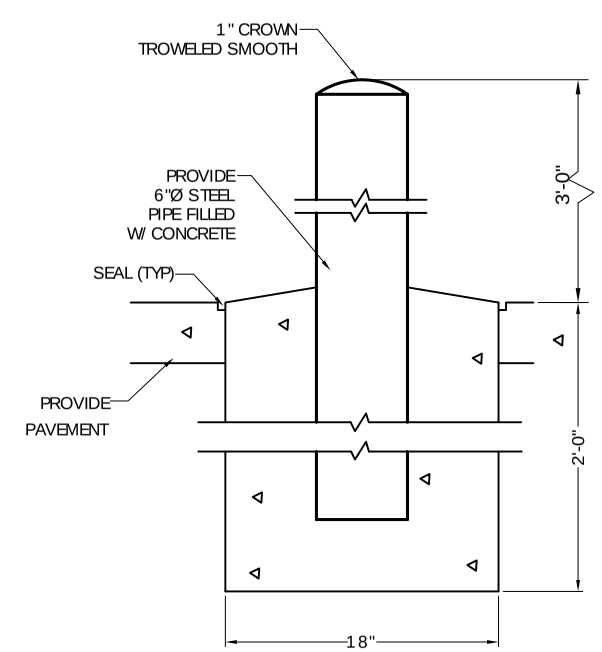

PIPE BOLLARD DETAIL 1

N. T. S. A2 A2

DAMMON
ENGINEERING, INC

CHIEF ENGINEER
EMMETT
DAMMON, P.E.

CHIEF ARCHITECT
ROBERT
WILTSE

1095 FLORIDA AVENUE
SLIDELL, LA. 70458
OFFICE: 985-649-5832
FAX: 985-641-5950

WEBSITE:
WWW.DAMMONENGINEERING.COM

EMAIL:
DAMMONENG@BELLSOUTH.NET

ARCHITECTURE

ENGINEERING

STUDIES

PLANNING

INVESTIGATION

EXPERT WITNESS

NEW
TRAINING
BUILDING

ARC MECHANICAL/
N. O. P. T.
427 OZONE PARK RD
COVINGTON, LA

FRAMING PLANS
ELEVATIONS
& SECTION

REV:

SCALE: AS NOTED

JOB#: 2003

DATE: 09-26-08

SHEET

A-2

OF