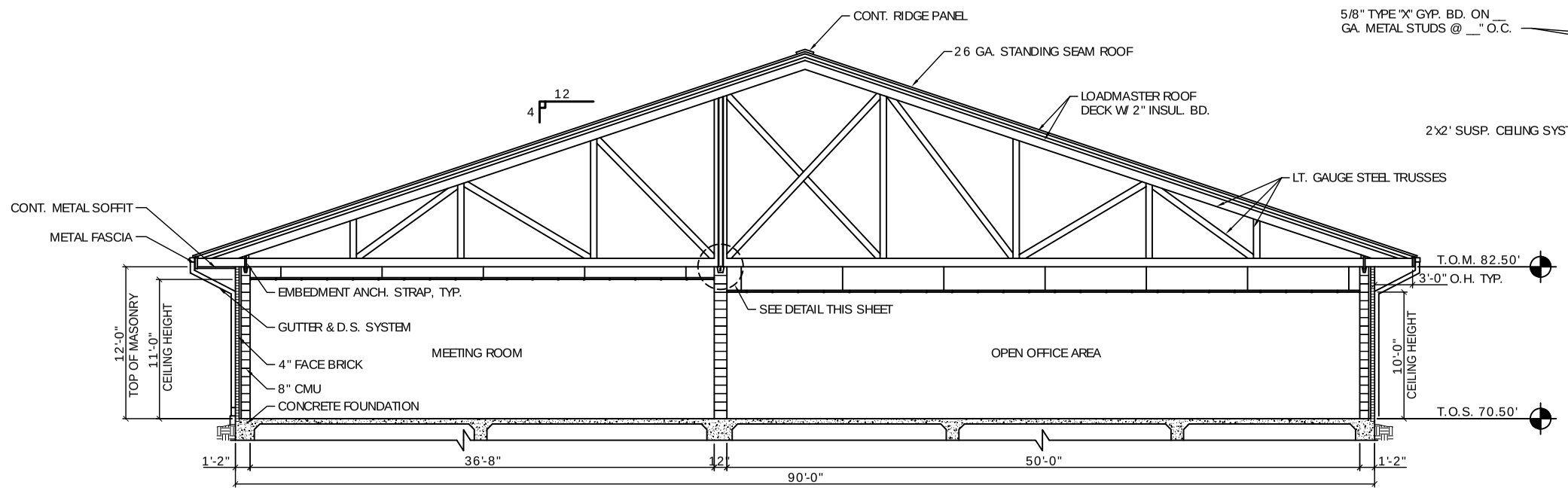

SECTION A
SCALE: 3/16"=1'-0"

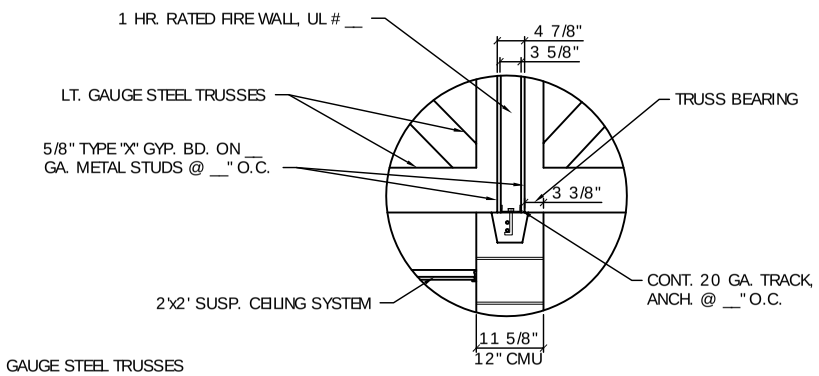

DETAIL
N.T.S.

DOOR & HARDWARE SCHEDULE

MARK	DETAILS HEAD	DETAILS JAMB	DETAILS SILL	SIZE	DOOR TYPE	FRAME	HDWR. NO.	STC	REMARKS
EXTERIOR DOORS									
1	- -	- -	- -						
2	- -	- -	- -						
3	- -	- -	- -						
INTERIOR DOORS									
4	- -	- -	- -						
5	- -	- -	- -						
6	- -	- -	- -						
7	- -	- -	- -						
8	- -	- -	- -						

WINDOW SCHEDULE

MARK	DETAILS HEAD	DETAILS JAMB	DETAILS SILL	SIZE	DOOR / WINDOW TYPE	FRAME	GLASS	LITES	REMARKS
A	- -	- -	- -						

NOTES:
1.

FINISH SCHEDULE

ROOM NUMBER	ROOM NAME	WALLS	EXTEND WALL TO DECK ABOVE	FLOOR	WALL BASE	CEILING	CLG. HT.	CABINETRY	NOTES	COMMENTS
100	COVERED DROP-OFF	BRICK VENEER	YES	BROOM SWEPT CONCRETE	NONE	MET. SOFFIT PANEL	12' NOM.	NONE		
101	FOYER	PTD CMU	NORTH SIDE	12x12 VCT	4" RUBBER	SAT	10'-0"	RECEPT. WDW.		
102	RECEPTION	PTD CMU	NORTH SIDE	12x12 VCT	4" RUBBER	SAT	10'-0"	RECEPT. CTR.		
103	OPEN OFFICE AREA	PTD CMU	NORTH SIDE	12x12 VCT	4" RUBBER	SAT	10'-0"	SEE A-1		
104	DIRECTORS OFFICE	PTD CMU	NORTH SIDE	CARPET	4" RUBBER	SAT	10'-0"	NONE		
105	CONFERENCE	PTD CMU	NO	CARPET	4" RUBBER	SAT	10'-0"	NONE		
106	COPY CENTER	PTD CMU	NO	12x12 VCT	4" RUBBER	SAT	10'-0"	SEE A-1		
107	ACCOUNTING	PTD CMU	NO	12x12 VCT	4" RUBBER	SAT	10'-0"	SEE A-1		
108	RESOURCE ROOM	PTD CMU	NO	12x12 VCT	4" RUBBER	SAT	10'-0"	NONE		
109	VAULT	PTD CMU	NO	12x12 VCT	4" RUBBER	EXP. MET. DECK	12' NOM.	NONE		
110	PANTRY / UTILITY	PTD CMU	NO	12x12 VCT	4" RUBBER	?	?	UTILITY SHELVING		
111	KITCHEN	PTD CMU	NO	12x12 VCT	4" RUBBER	SAT	10'-0"	SEE A-1		
112	MEETING ROOM	PTD CMU	SOUTH & WEST SIDES	12x12 VCT	4" RUBBER	SAT	11'-0"	NONE		
113	MECHANICAL ROOM	PTD CMU	SOUTH SIDE	12x12 VCT	NONE	5/8" GYP. BD.	12' NOM.	NONE		
114	MECHANICAL ROOM	PTD CMU	SOUTH SIDE	12x12 VCT	NONE	5/8" GYP. BD.	12' NOM.	NONE		
115	CORRIDOR	PTD CMU	YES	12x12 VCT	4" RUBBER	5/8" GYP. BD.	12' NOM.	NONE		
116	VESTIBULE	PTD CMU	YES	12x12 VCT	4" RUBBER	5/8" GYP. BD.	12' NOM.	NONE		
117	ENTRANCE	BRICK VENEER	EAST & WEST SIDES	BROOM SWEPT CONCRETE	NONE	MET. SOFFIT PANEL	12' NOM.	NONE		
118	WOMEN	PTD CMU	EAST & WEST SIDES	QT	QT BULLNOSE	SAT	10'-0"	NONE		
119	MEN	PTD CMU	EAST & WEST SIDES	QT	QT BULLNOSE	SAT	10'-0"	NONE		
120	WOMEN	PTD CMU	NORTH SIDE	QT	QT BULLNOSE	SAT	10'-0"	NONE		
121-126	CLOSETS	PTD CMU	SOUTH SIDE	12x12 VCT	4" RUBBER	5/8" GYP. BD.		NONE		
127	MEN	PTD CMU	NORTH SIDE	QT	QT BULLNOSE	SAT	10'-0"	NONE		
128	ELECTRICAL ROOM	PTD CMU	NO	12x12 VCT	4" RUBBER	5/8" GYP. BD.	12' NOM.	NONE		
129	MECHANICAL ROOM	PTD CMU	EAST, WEST & SOUTH SIDES	12x12 VCT	4" RUBBER	5/8" GYP. BD.	12' NOM.	NONE		
130	ENTRANCE	BRICK VENEER	NO	BROOM SWEPT CONCRETE	NONE	MET. SOFFIT PANEL	12' NOM.	NONE		

DAMMON ENGINEERING, INC.

CHIEF ENGINEER
EMMETT
DAMMON, P.E.

CHIEF ARCHITECT
ROBERT
WILTSE

1095 FLORIDA AVENUE
SLIDELL, LA. 70458
OFFICE: 985-649-5832
FAX: 985-641-5950

WEBSITE:
WWW.DAMMONENGINEERING.COM

EMAIL:
DAMMONENG@BELLSOUTH.NET

ARCHITECTURE

ENGINEERING

STUDIES

PLANNING

INVESTIGATION

EXPERT WITNESS

NEW OFFICE COMPLEX

CHILD DEVELOPMENT COUNCIL OF ACADIANA, INC.
OPELOUSAS, LA

SECTION & SCHEDULES

REV:

SCALE: AS NOTED

JOB#: 2030

DATE: 7-2-09

SHEET

A-2

OF