MODEL # BASED ON RUSSWOOD'S ULTIMA SERIES AS BASIS OF DESIGN.

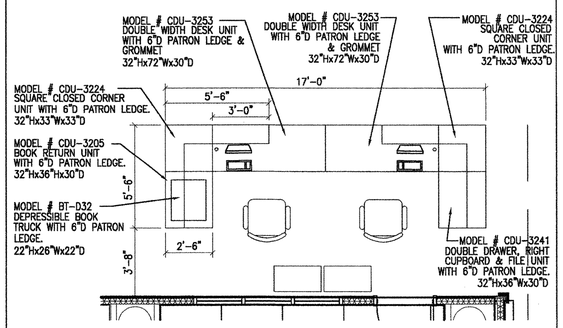

6 A1.65 MODULAR CIRCULATION DESK PLAN
SCALE: 1/4" = 1'-0"
ROOM #2030

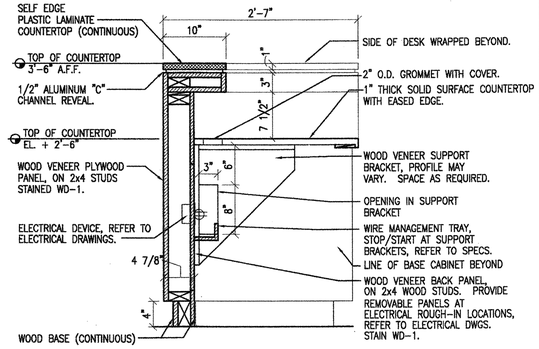

4 A1.65 SECTION AT 42" HIGH COUNTERTOP
SCALE: 1" = 1'-0"

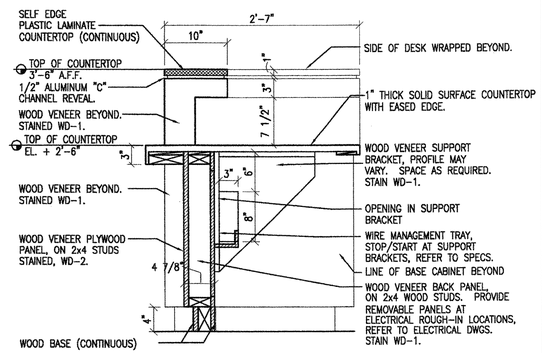

5 A1.65 SECTION AT 30" HIGH COUNTERTOP
SCALE: 1" = 1'-0"

NOTE: ENTIRE RECEPTION DESK SHALL BE INTERIOR ARCHITECTURAL WOODWORK. CASEWORK TAGS ARE NOTED FOR REFERENCE TYPE ONLY. BODY OF DESK INCLUDING BASE CABINETS SHALL BE WOOD VENEER. ALL CABINET DOORS AND DRAWERS SHALL BE LOCKABLE.

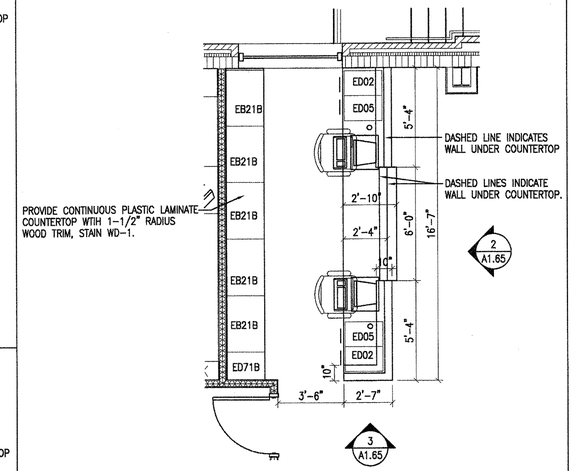

EB21B- 36"W x 30"H x 24"D
BASE UNIT WITH TWO DRAWERS, ONE ADJUSTABLE SHELF, AND TWO HINGED DOORS.

ED02- 16"W x 30"H x 24"D
FILE DRAWER UNIT WITH FOLLOWERS, 2 EQUAL DRAWERS (INSIDE SIDES TO BE 9 3/4"H) AND HANGER CHANNEL INTEGRAL WITH DRAWER SIDES FOR BOTH LEGAL AND LETTER FILING.

ED05- 16"W x 30"H x 24"D
FILE DRAWER UNIT WITH FOLLOWERS, ONE FILE DRAWER (INSIDE SIDES TO BE 9 3/4"H) HANGER CHANNEL INTEGRAL WITH DRAWER SIDES FOR BOTH LEGAL AND LETTER FILING, AND TWO TOP DRAWERS (INSIDE SIDES TO BE 3 3/4"H).

ED71B- 18"W x 34"H x 24"D
DRAWER UNIT WITH FOUR EQUAL DRAWERS. 5" DEEP INSIDE.

1 A1.65 RECEPTION DESK PLAN
SCALE: 1/4" = 1'-0"
ROOM #1015

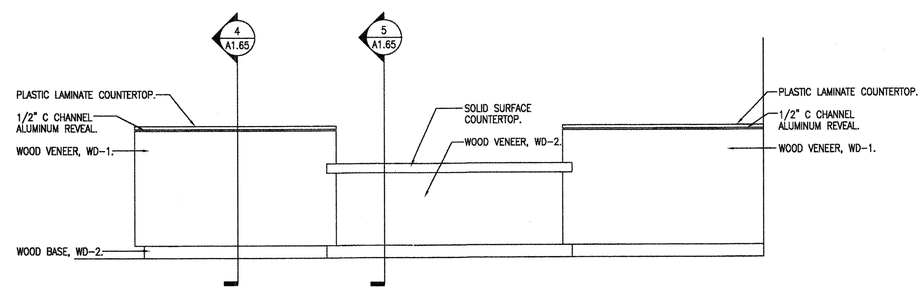

2 A1.65 RECEPTION DESK FRONT ELEVATION
SCALE: 1/2" = 1'-0"

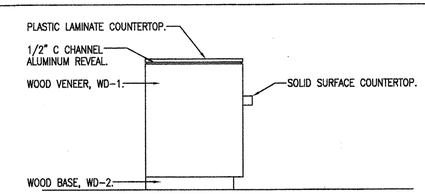

3 A1.65 RECEPTION DESK SIDE ELEVATION
SCALE: 1/2" = 1'-0"

VergesRome Architects
FANNING HOWEY
A Joint Venture
320 N. Carrollton Avenue, Suite 100
New Orleans, Louisiana 70119
t. 504.488.7739 f. 504.488.7743

© copyright 2012

ERNEST E. VERGES, II
REG. NO. 3906
STATE OF LOUISIANA
REGISTERED ARCHITECT

NEW 3 SECTION ELEMENTARY SCHOOL AT FISK-HOWARD SCHOOL
RECOVERY SCHOOL DISTRICT

211 S. LOPEZ STREET
NEW ORLEANS, LOUISIANA 70119

DATE ISSUED:	7 DECEMBER, 2012
REVISED:	
REVISED:	
REVISED:	
REVISED:	
DRAWN BY:	
CHECKED BY:	
PHASE:	BID DOCUMENTS

11085

TITLE: **RECEPTION AND CIRCULATION DESK**

SHEET: **A1.65**