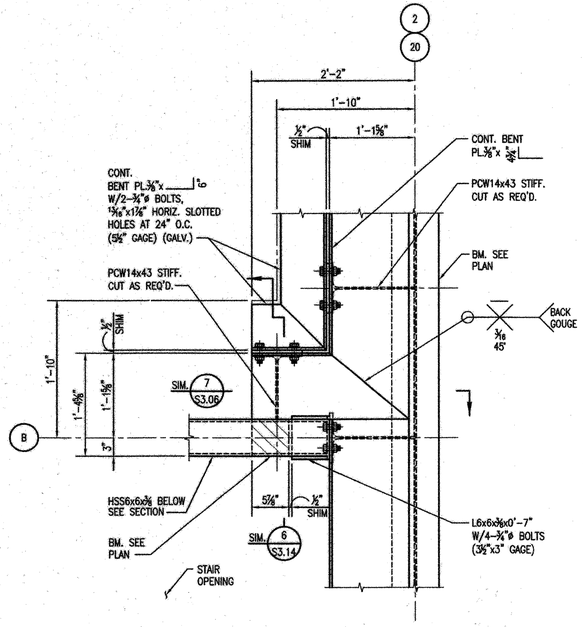

1 S3.15 DETAIL 1"=1'-0"

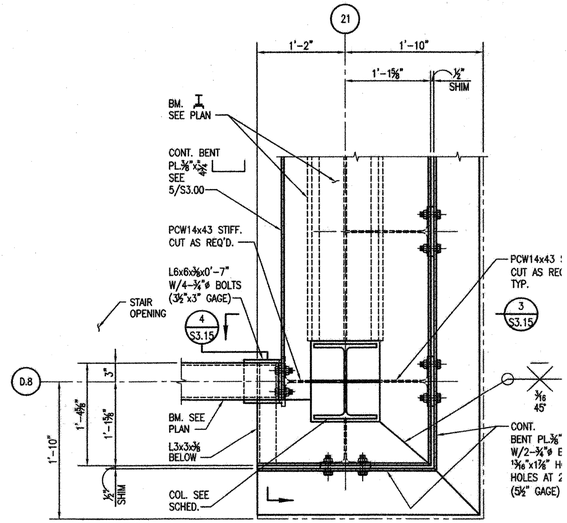

2 S3.15 DETAIL 1"=1'-0"

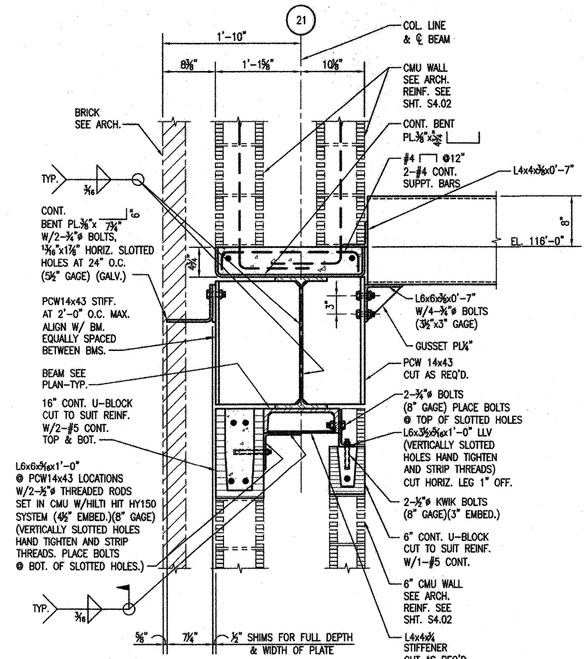

3 S3.15 SECTION-3RD FLOOR 1"=1'-0"

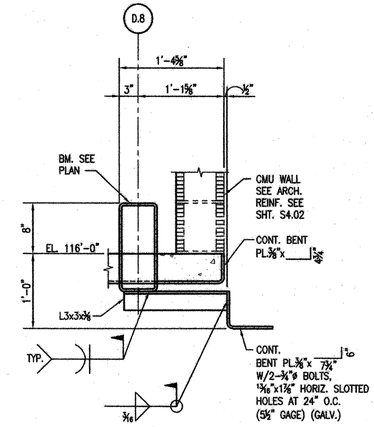

4 S3.15 SECTION-3RD FLOOR 1"=1'-0"

VergesRome Architects
FANNING HOWEY
A Joint Venture
320 N. Carrollton Avenue, Suite 100
New Orleans, Louisiana 70119
t. 504.488.7739 f. 504.488.7743

© copyright 2012

STATE OF LOUISIANA
DONALD C. MAKOFSKY
License No. 10436
PROFESSIONAL ENGINEER
IN
CIVIL ENGINEERING
DEC 07 2012

NEW 3 SECTION ELEMENTARY SCHOOL AT FISK-HOWARD SCHOOL

RECOVERY SCHOOL DISTRICT

211 S. LOPEZ STREET NEW ORLEANS, LOUISIANA 70119

DATE ISSUED:	7 DECEMBER, 2012
REVISED:	
REVISED:	
REVISED:	
REVISED:	
DRAWN BY:	WFD
CHECKED BY:	JAS

PHASE: BID DOCUMENTS

11085

TITLE: SECTIONS AND DETAILS

SHEET: S3.15

MORPHY MAKOFSKY INCORPORATED CONSULTING ENGINEERS (504)488-1317 JOB NO. 12053